U.S. Army Heritage and Education Center Analysis and Research Team

Huddled Masses:

US Army Support to Refugee Operations, 1975-1980

9 OCT 2021

Table of Contents

Table of Contents ii
Executive Summary 1
Insights-Vietnamese Refugee Mission 4
Insights-Cuba Refugee Mission 6
Part I - Indochinese Refugee Operations, 1975 7
Background 7
Evacuation Operations 7

Operation BABYLIFT (April 2-26, 1975) 7

Figure 1-Operation BABYLIFT Processing 9

Operation EAGLE PULL (April 12, 1975) 10

Operation FREQUENT WIND (April 29-30, 1975) 11

Refugee Operations 15

Operation NEW LIFE (April 23- November 1, 1975) - Guam 15

Figure 2-TF New Life -- Orote Point, Guam 16

Operation NEW ARRIVALS (Apr 29-Dec 20, 1975) 17

Camp Pendleton 17

Fort Chaffee 17

Figure 3-Task Force NEW ARRIVALS - Fort Chaffee 18

Eglin Air Force Base 19

Fort Indiantown Gap 19

Figure 4 - TF NEW ARRIVALS -- Fort Indiantown Gap, PA 21

Figure 5- CONUS Refugee Center Populations: April-December 1975 .. 21

Refugee Reception Centers – Support Operations 22

Subsistence Support 22

Linguist Support 22

English Language Training 23

Figure 6-Vietnamese Refugee English Language Skills 23

Joint Refugee Information Clearing Office (JRICO) 24
Interagency Task Force for Indochinese Refugees (IATF) 25
Preparation and Planning for Refugee Operations 25
Department of Defense 25
Immigration Authority 26
Resettlement Processing 26
Figure 7 -- Civilian Organization for TF NEW ARRIVALS 27
Refugee Processing 27
Figure 8-Refugee Processing Timeline 28
Refugee Demographics 28
Figure 9- Vietnamese Refugee Age & Gender Demographics 29
Figure 10-Head of Household Employment Skills- Vietnamese Refugees 30
Repatriation 30
Figure 11 - Operation NEW ARRIVALS Resettlement Statistics 32
Termination of Army Supported Refugee Facilities 32
Part II. Cuban Refugee Operations 34
Figure 12- TF Indiantown Gap Task Organization 36
Legal authority of the Federal agencies over the aliens 36
Disposition of criminals 37
Disposition of mental cases 37
Care and control of unaccompanied juveniles 37
Education and Employment Status 38
Figure 13- Head of Household Employment Skills- Cuban Refugees 38
Figure 14-Educational Attainment, Cuban Refugees 39
Residuals 39
Annex A. Glossary 41
Annex B. Lessons Learned: Indochinese Refugee Operations, 1975 43

Interagency Task Force (IATF) 43
Organization 43
Legislative Authorization 44
International Aspects 44
Media and Public Awareness 45
Resettlement Agencies 46
Center Operations 46
Budget Preparations 48

Federal Agency Roles 50
Table 1- Federal Agency Roles 50
Department of State 50
Immigration and Naturalization Service 50
Department of Justice 50
Department of Defense 50
Department of Health, Education, and Welfare 51
National Security Council 51
Department of Treasury 51
Department of Labor 51
Department of Housing and Urban Development 51
Office of Management and Budget 51
Intelligence Community 52
US Agency for International Development (USAID) 52
Department of Transportation 52
United States Information Agency (USIA) 52
Department of Interior 52

Department of the Army 53
Significant Issues Summary 53
Organization 53
Refugee Welfare 53
Refugee Health Care 53
Refugee Legal Status 54
Military Personnel 54
Facilities 55
Issues and Recommendations 56
Command and Control 56
Department of the Army Staff Coordination 56
Tasking Authority 56
Cross-MACOM Coordination 56
Staff Organization 57
Uniform Administration 57
Aircraft Scheduling 57
Organizational Confusion 57

Operations 57
Mission 57
Support of Summer Training 58
No OPLAN for Refugee Operations 58
Delay in Orders 58
Civilian Agency Responsibility 59
Delineation of Roles 59
Continuity of civilian task force staffing 59
Senior Civil Coordinator's Authority 59
Central Coordination. 59
Refugee Welfare 60
Self-Help Work 60
Population control and collection of demographic data 60
Concessions for conversion of valuables 61
Refugee Legal Issues 61
Military Police Authority 61
Military Personnel 62
Qualified civil/military affairs personnel for internal control 62
Enlistment Options. 62
Women's Army Corps (WACs) 62
Qualified linguists for refugee operation support 63
Reserve Augmentation. 63
Facility Management 63
Natural resources at installations supporting refugee operations 64
Planning for winter operation of reception centers 64
Accountability of US Government property 64
Installation Support 65
Local Response 65
Mission Termination 65
Termination of reception center operations 65
Planning - Extended Operations. 66
Annex C. Lessons Learned: Cuban Refugees, 1980 67
Command and Control 67
Task Force Preparation 67
EOC Staffing 67
Updating the EOC 67
Operations 68
Out-processing Delays 68
Civilian Agency Responsibility 68
Lack of VOLAG Training 68
Returning Aliens 68
Translation Difficulties 69
Difficulties with FEMA coordination 69
On the Job Accidents 69
Media Control 70

Pass and badge system 70
Refugee Welfare 70
Alien Processing 70
Reunification of families during processing 70
Alien Status 70
Social Separations 71
Return of aliens 71
Alien Accountability 71
Homesteaders 72
Refugee Health 72
Medical Processing 72
Medical Evacuation 72
Hospital RTD 73
Personal Hygiene 74
Refugee Legal Issues 74
Agitators and Malcontents 74
Fraternization 74
Cuban Security Force 75
Wanton destruction of government property (troop billets) 75
Clothing Thefts 75
Document Forgery 76
Clothing Hoarding 76
Trespassing 76
Resistance 76
Acts of violence 77
Isolated attacks of Cubans versus Cubans 77
Flagrant display of weapons inside alien areas 77
Runners/strollers/walkers 77
Counterfeit passes/badges 78
Unaccounted for aliens 78
Unauthorized escorts 78
Safety of Engineers 78
Military Personnel 78
Personnel Turnover 79
Personnel Accountability 79
Lack of proper notification to augmentee personnel 79
Manning Requirements 79
Continuity of units/personnel 79
Civil Affairs/Provisional Support Unit Augmentation Personnel (Active) 80
Civil Affairs/Provisional Support Unit Augmentation Personnel (Reserve) 80
Sustainment 80
Lack of logistical/operational decisions by Federal agencies 80
Prioritization of support units/temporary hire personnel. 81
Menu 81

Meal Cards 81
Feeding Times 82
Dietary Problems 82
Removal of food from mess halls by aliens..... 82
Lodging 83
Religious Services. 83
Postal Services 83
Facilities Management 83
Installation/Task Force Integration 83
Care of areas/buildings. 84
Water Pressure 84
Engineer Requests 84
Work Requests 85
Mission Termination 85
Departure of Military Personnel 85
Annex D. Timelines 86

Figure 17- Operation NEW ARRIVALS, APR-JUN 1975 86

Figure 18- Operation New Arrival, JUL-AUG 1975 86

Figure 19- Operation New Arrival, OCT-DEC 1975 87

Figure 20-Fort Indiantown Gap, May- July 1980..... 87

Figure 21-Fort Indiantown Gap, AUG-OCT 1980..... 88

U.S. Army Heritage and Education Center Analysis and Research Team

Prepared By:
Conrad C. Crane, PhD
Chief, Analysis and Research Team

Michael E. Lynch, PhD
Research Historian

Shane P. Reilly
Contract Research Analyst

"Give me your tired, your poor,
Your huddled masses yearning to breathe free,
The wretched refuse of your teeming shore.
Send these, the homeless, tempest-tost to me,
I lift my lamp beside the golden door!"[1]

Executive Summary

This study examines the role that the US military, and specifically the US Army, played during two large refugee operations. The responses to those operations reflect not only differences in national will, but a differing level of military support that affected the outcome of the mission. Coordination of federal and volunteer agencies proved critical to the mission, but only the military has the capacity for large scale logistics, detailed and complex planning, force and refugee protection, medical support, and the ability to respond immediately to urgent requirements in multiple locations.

The two cases presented here illustrate examples of how the refugee mission has been conducted well and how it has been conducted poorly. Operation NEW ARRIVALS, the resettlement of Vietnamese and Cambodian refugees in 1975, featured a federal interagency task force reporting to the President and funded by Congressional appropriation. Within the Department of Defense, the mission was assigned to two major commands (FORSCOM in CONUS, US Army CINCPAC

[1] Emma Lazarus, "The New Colossus," November 2, 1883. This poem was originally written for an auction to raise money for the pedestal of the Statue of Liberty. When the poem (especially the lines quoted) was added to the base the statue nearly 20 years later, it became an iconic description of American idealism.

Support Group in Pacific), with direction from the Army Staff and supervision by the Secretariat. Notably, the Army assigned units to the mission and gave those units the resources to execute. After the military portion of the mission ended, a civilian cabinet level agency continued the mission for two more years.

By contrast, the resettlement of Cuban and Asian refugees in 1980 enjoyed no such centralized planning or execution. US immigration policy was muddled by shifting authorizations, and no interagency task force was established to coordinate all necessary activities. The Federal Emergency Management Agency (FEMA) was assigned to assist refugees arriving at the Orange Bowl in Miami, until their families could pick them up. There was no comprehensive resettlement plan as there had been five years earlier. Those refugees deemed difficult to resettle were then sent to refugee camps operated by the military. The Army's approach was also unfocused. It lacked centralized direction from Army staff level, and no MACOM was assigned the task. Garrison staffs or assigned additional duties as a task force rather than units, it even lacked an operational name. The result was that the refugee processing in 1975 was much smoother and resulted in a better transition for the refugees then did the process in 1980. It also illustrates that the Army often does not learn the lessons it collects.

The collapse of the Vietnam and Cambodia in the Spring of 1975 triggered an exodus of refugees escaping the totalitarian regimes that followed. These twin crises caused the United States to activate Noncombatant Emergency Evacuation (NEMVAC) plans for Cambodia (Operation EAGLE PULL) and Vietnam (Operation FREQUENT WIND). The emergency also caused other problems that required emergency planning and execution of refugee evacuations. Operation BABYLIFT extracted hundreds of orphaned babies bound for the United States and other countries. The NEMVAC of US citizens from Saigon drove thousands of Vietnamese refugees, especially those who had worked for the US government to flood the embassy, seeking protection. The mission to remove those refugees from danger and get them under US control at temporary bases in the mid-Pacific was christened Operation NEW LIFE, and the subsequent mission to bring these refugees to CONUS and help them settling in the United States was called Operation NEW ARRIVALS.

The Indochinese refugee program initiated by President Gerald R. Ford and administered by the Interagency Task Force for Indochina (IATF) addressed the needs of receiving and resettling these evacuees. The Indochina Migration and Refugee Act of 1975 allowed the refugees to be admitted into the United States under the parole authority of the Attorney General. The Act also authorized $305 million for the Department of State and $100 million for the Department of Health, Education, and Welfare (HEW) to execute the program. In eight months, the US government evacuated more than 133,000 Vietnamese and Cambodian refugees and assisted their immigration to the United States. The refugee act also admitted several thousand

Laotian refugees the following year. Permanent resettlement required another three years of effort from several government agencies.[2]

Strong bonds of friendship existed between many of the Vietnamese refugees and their American former advisors and this, coupled with widespread compassion for those escaping a collapsing country, gave the Vietnamese and Cambodians an advantage in starting a new life in the United States. Even the names of the operations implied an optimistic and welcoming national attitude. While this attitude was not universal and refugees or not welcomed as warmly in all places, they generally experienced a smooth transition. This has enabled that generation of refugees and their children to assimilate into American life quickly, make contributions, and achieve success.

These missions served as a precursor to the Cuban refugee crisis. The Cuban and Haitian refugees who arrived in 1980 enjoyed a base of support among the Cuban American and Haitian American communities in South Florida, but they were not as widely supported throughout the country. The somewhat chaotic resettlement process reflected the US government's inconsistent policies. President Jimmy Carter initially authorized the immigration 3,500 Cubans, and when thousands more landed in Florida, he extended them temporary protection as well. But when the number swelled to more than 25,000 with the addition of Haitian refugees, Carter then established a blockade to prevent boats from reaching Florida, though many did. Upon arrival in Florida, refugees were temporarily housed in the Miami Orange Bowl until FEMA for other agencies could help them unite with their families. Those who were deemed hard to place, which included those who had been released from mental institutions and jails as well as those who had no families in the area, were then shipped north to longer term resettlement camps operated by the military.

Using planning data based on the experience in 1975, the US Army again opened and operated refugee camps to process large numbers of refugees in some of the same locations. Despite the wealth of detailed after-action reports collected at all levels for Operation NEW ARRIVALS, the Army failed to learn many lessons. The experience of the Cuban refugee operation five years later indicated that some of the same problems occurred. One of the key lessons unlearned was is the need for centralized control. The Army apparently pushed away from the refugee mission and failed to deploy adequate headquarters staff to run the operations.

---

[2] *Indochina Migration and Refugee Act of 1975*, Public Law 94-23; *Appropriations for special assistance to refugees from Cambodia and Vietna*m, Public Law 24-24. The Department of Education Organization Act of 1979 separated the education mission from the Department of Health, Education, and Welfare (HEW) which was renamed the Department of Health and Human Services (HHS).

Insights-Vietnamese Refugee Mission

- DoD underestimated duration of the mission: “The initial conception... assumed that the refugees would not be in the centers very long... These were poor assumptions.”
- The military, by its very nature, possesses the assets and flexibility to respond to the requirements of this sort of operation. Military commanders must expect and be prepared to assume responsibility for diverse non-military actions which cannot be accomplished by the federal civilian agencies.
- Task forces should be temporary in nature not long-term operations, to ensure that the refugees do not become dependent on them. The original concept of a short-term operation became obsolete once the magnitude of the refugee population was realized. This delay affected several decisions that should have been made earlier.
- Any planning for future operations should assume that processing will be delayed.
- A Presidential Task Force should be established, directed by a high-level government official. The Director should be appointed by and report to the President. Agency representatives to the Task Force should be senior officials who will be responsible for coordinating their respective agency's participation.
- One agency should be designated as the Executive Agent to provide management support.
- State and local officials must be receptive to accepting the refugees. Early information from regarding federal funding of refugee support systems is required.
- Upon activation of a joint civilian and military task force, areas of responsibility and authority should be immediately ascertained and delineated for the benefit of all officials concerned.
- Civilian agencies must determine personnel requirements for the duration and recognize the value of continuity in such operations. The military must be prepared to sustain an activity during the transition of agency directors, or the activity will falter.
- Coordination among civilian and military task force elements, local government officials, civic and business leaders and with the news media should be achieved to facilitate productive public relations at refugee reception center level.
- Refugee programs require the assignment of full-time Department of State, Department of Homeland Security, and other federal agency representatives. Although the military departments may be tasked with reception center management and support, the civilian agencies which ultimately must make all policy decisions that affect the refugees. On-site civilian liaison officers are

indispensable in obtaining and disseminating guidance from US Government agencies.

- Appropriate language instruction and an orientation on life in the United States should be commenced as soon as possible for all refugees.
- Medical specialties should be provided based on age distribution of the refugees. A large proportion of the Vietnamese and Cambodian refugees were children, which resulted in the requirement for more pediatricians and general medical officers than were available.

Insights-Cuba Refugee Mission

- Legal jurisdiction over refugees must be determined and appropriate guidance issued prior to their arrival. The Cuban refugees included a large criminal element that caused continual problems.
- The immigration status of the refugees should be ascertained and disseminated to all agencies as soon as possible.
- When the military cannot meet the requirements for qualified linguists, those services should be contracted immediately.
- The impact of proposed refugee reception facilities on the environment should be promptly and fully evaluated.
- When evaluating semi-active installations for possible utilization in a refugee support operation, consideration must be given to the capability of the local garrison to support the Task Force during the initial phases and the proximity of other installations capable of providing support.
- Reservists on MUTAs, although gaining "hands on" knowledge of operations, did not have sufficient time to perform productively in camp management, similar to active-duty personnel on orders for less than 30 days. Reservists on MUTAs only added to the turbulence of the two-week turnover of personnel on AT. Reservists on MUTAs should not be allowed to participate in future operations of this nature.

Part I - Indochinese Refugee Operations, 1975

Background

As the political and military situations in the Republic of Vietnam deteriorated in the spring of 1975, the United States began preparations for what would become one of the largest humanitarian evacuations in its history. Most U.S. military forces had withdrawn from Vietnam after the Paris Peace Accords of 1973, but hundreds of American citizens and Vietnamese employees of the United States remained. The political and military difficulties facing the governments of the Republic of Vietnam and Cambodia in early 1975 caused grave concern to American political and military leaders charged with the planning and execution of sustained support to those two nations. President Gerald R. Ford sent Army Chief of Staff of the GEN Fred C. Weyand to Vietnam in late March to assess the situation. Weyand reported that events in the immediate future might force the US to shift its support from military assistance and economic aid to humanitarian relief and evacuation of large numbers of the local population.[3]

Evacuation Operations

The Military Assistance Command Vietnam (MACV) had developed plans for evacuating U.S. citizens as early as 1972. The evacuation of Indochinese refugees and American citizens was conducted under three different operations.[4]

Operation BABYLIFT (April 2-26, 1975): Evacuation of orphans from Cambodia and Vietnam to safe havens in Thailand and US territories in the Pacific, and then on to CONUS. The operation evacuated approximately 2,700 Vietnamese and Cambodian children, 1,800 of whom who entered the United States. DOD provided temporary shelter and medical care at three locations.

---

[3] Operations and Readiness Directorate, Office of the Deputy Chief of Staff for Operations and Plans, *After Action Report: Operations New Life/NEW ARRIVALS US Army Support to the Indochinese Refugee Program 1 APRIL 1975 - JUNE 1976* (Washington, DC: Department of the Army, 25 January 1977) I-A-1. Hereafter, ODCSOPS AAR. Operation Frequent Wind was exceeded in scale by Operation Christmas Cargo. In December 1950, in the face of overwhelming forces from the Communist Chinese Army and the North Korean People's Army (NKPA), the US Navy and US Air Force evacuated more than 100,000 American and Korean Soldiers and Marines as well as nearly 100,000 Korean civilians from Hungnam, North Korea. *See also* Michael E. Lynch, *Edward M. Almond and the US Army From the 92nd Infantry Division to the X Corps*, (Lexington, KY, 2019).

[4] United States Military Assistance Command – Vietnam, COMUSMACV OPLAN 5060-, Nov. 9, 1972.

The US Agency For International Development (USAID) had begun providing aid to Vietnamese orphanages in 1973. Holt International, a US-based adoption agency, began assisting USAID supporting the orphanages, and then developed an adoption program to allow American citizens to adopt Vietnamese orphans. They feared the delay of the Vietnamese-US immigration procedures would slow down or stop the process. Furthermore, the increased fighting caused a surge in the number of refugees, which put more pressure on existing child welfare facilities. Perspective parents and several adoption agencies became concerned as conditions worsened, and they asked the U.S. Government to assist in evacuating the Vietnamese orphans already approved for adoption to the United States. The voluntary agencies were having difficulty in arranging private flights, and US commanders became concerned that they might unduly interfere with other evacuation plans.

On April 1, 1975, the Department of State requested that the Department of the Army assist in providing temporary care for Vietnamese and Cambodian orphans to be evacuated to the continental United States. Anderson AFB, Guam, and Clark Air Base, Philippines, were designated as safe havens for the orphans initially. The Secretary of Defense authorized use of the Presidio of San Francisco; Long Beach Naval Support Activity; and Fort Lewis, Washington for orphan refugee support. Operation BABYLIFT began tragically April 2, 1975, when a C5A Galaxy carrying 228 orphans crashed on takeoff from Than Sun Nhut Airport in Saigon, killing 78 of the orphans. The mission continued despite the tragedy, and the first flight of orphans arrived at the Presidio of San Francisco on April 3, 1975. Long Beach and Fort Lewis had initiated contingency planning for the support of several hundred orphans and had established contact with adoption agencies.[5]

There were also some independent efforts which, though laudable for their effort to help, increased the level of chaos. In one case, Edward J. Daly, President of World Airways, flew 45 orphans and others out of Vietnam April 2 on an unauthorized flight, without the necessary approvals from the authorities, one day prior to the initiation of Operation BABYLIFT. In another, Betty Tisdale, the wife of an Army colonel at Fort Benning, served as president of An Loc Orphanage, Inc., a foundation that supported the orphanage in An Loc Province, Vietnam. Tisdale traveled to Vietnam before the evacuation, then arranged with the Pearl S. Buck Foundation to get the orphans from An Loc out of the country. She then met the plane in Los Angeles and demanded that those orphans be flown immediately to Fort Benning. In the chaos and urgency of the time, the orphans went to Fort Benning without anyone completing all the necessary immigration paperwork. Once the orphans arrived at Fort Benning, Tisdale refused to allow the Pearl S. Buck Foundation to place the children, but they were eventually

[5] Saigon was renamed Ho Chi Minh City after the Republic of Vietnam collapsed. District 1 of the city retains the name Saigon.

placed in homes by Tressler Lutheran Services. Because of this conflict, Operation BABYLIFT refused to pay any costs associated with caring for these children. The effort also resulted in several lawsuits on behalf of both Vietnamese and Cambodian orphans, which challenge whether some of the children were truly orphans. Because of the chaotic nature of the evacuation, many records were lost, and the Immigration and Naturalization Service (INS) spent months attempting to validate each of the orphans.[6]

The speed with which the mission evolved inevitably caused communication problems. There was no recent precedent for planning for an emergency of this nature and procedures were developed as needed. That confusion led to sub-par performance in some cases. More than half of the orphans (1,313) arrived at the Presidio of San Francisco. The Presidio staff immediately began working to provide communications, housing, food service, transportation, equipment and supplies, and security for the refugees. The Presidio leadership and staff, however, assumed that it was to perform only a "hotel keeping" function, and never wavered from this position. A civilian organization, Orphans Airlift Inc., stepped in to conduct all the planning, organizing, and coordinating all the other activities not related to hotel services. Orphans Airlift moved in and controlled the operation, and though it experienced problems, it did what the Presidio staff was unwilling to do.[7]

In all, the US evacuated 2,715 orphans to CONUS; the Army cared for 1,853 were supported by the Army, Holt International sponsored 409, and the US Navy cared for the remainder. Those children were among the first wave of new arrivals in what would be an evacuation of more than 133,000 men, women, and children (See Fig. 1).

Location	Dates	Orphans
Presidio of San Francisco	2 APR-3 MAY	1,313
Long Beach NSA	12 APR-3 MAY	452
Fort Lewis, WA	29 APR-7 MAY	224

Figure 1-Operation BABYLIFT Processing[8]

---

[6] US Agency for International Development, *Operation Babylift Report, (Emergency Movement of Vietnamese and Cambodian Orphans for Intercountry Adoption) April - June 1975* (Washington, DC: USAID, 1975), 2, 8-9. Hereafter, Operation Babylift Report. The Immigration and Naturalization Service (INS) was an agency of U.S. Department of Justice from 1940 to 2003 and administered federal immigration laws and regulations including the Immigration and Nationality Act (Title 8, United States Code). The Homeland Security Act of 2003 created the Department of Homeland Security (DHS). The act dissolved the INS and transferred its functions to three new agencies under DHS: U.S. Citizenship and Immigration Services (USCIS); U.S. Immigration and Customs Enforcement (ICE), and U.S. Customs and Border Protection (CBP).

[7] USAID, *Operation Babylift Report,* 29, 34.

[8] USAID, *Operation Babylift Report, 59.*

The plight of homeless orphan babies immediately generated widespread sympathy and support in American public. Many families immediately volunteered to adopt and were disappointed when they discovered that most of the orphans had already been placed prior to arrival. Some who were not supportive accused the government of using the orphans as political leverage to get more money for the failing South Vietnamese regime.

At the same time, large numbers of Vietnamese and Cambodians went to sea using sampans, fishing boats, anything that would float. US Navy ships on station off the coast of Vietnam and Cambodia began picking up refugees and taking them to safe havens, which initially meant US installations in the Philippines.[9]

Operation EAGLE PULL (April 12, 1975): Evacuation of US uniformed and civilian personnel from Phnom Penh, Cambodia. With Operation Babylift as the precursor to a larger general evacuation effort, the Departments of State and Defense began preparing contingency plans.

In May 1973 ADM Bernard A. Clarey, Commander in Chief, US Pacific Fleet (CINCPACFLT), ordered his staff to develop contingency planning for the NEMVAC of Cambodia. The plan (OPLAN 5060-C) was issued three months later and named "EAGLE PULL." CINCPACFLT created three options for the EAGLE PULL evacuation:

- Option I: Evacuation of non-combatants from Pochentong Airport (Phnom Penh) using commercial civilian aircraft under the direction of the US Ambassador.
- Option II: Same location as option I but using fixed-wing military aircraft and the deployment of fifty USAF Security Police (SP) for protection.
- Option III: Gathering of evacuees at designated landing zones (LZ) for pick-up by rotor-wing platforms.[10]

The potential for an evacuation of more than 1,000 personnel resulted in the creation of a fourth option. This new contingency added two USMC rifle companies (reinforced) for security.

By early April, the political situation in Cambodia deteriorated rapidly, and the National Command Authority ordered the evacuation of the families of US Mission staff from Phnom Penh. Meanwhile in the Gulf of Thailand, the USN's Amphibious Ready Group Alpha (Task Group 76.4), with 31st Marine Amphibious Unit (MAU) embarked, took a position 110 nautical miles southwest of Phnom Penh, in the Gulf of Thailand off

---

[9] ODCSOPS AAR, I-A-3.

[10] Patrick Urey, *U.S. Marine Corps Participation in the Emergency Evacuations of Phenom Penh and Saigon: Operations Eagle Pull and Frequent Wind* (Arlington: Center for Naval Analyses, 1977), 4. ADM Bernard A. Clarey served as CINCPACFLT from DEC 1970-SEP 1973.

Kompong Som. ARG A consisted of USS *Okinawa* (LPH 3), USS *Vancouver* (LPD 2), USS *Thomaston* (LPD-28), and USS *Peoria* (LST-118). The USS *Hancock*, with MAU 33 embarked, was also present.

On the morning of April 11, 1975, USMC helicopters carrying a security force of 346 Marines departed from the USS *Okinawa* and headed towards designated landing zones. Operation EAGLE PULL was executed on April 12, 1975, and Marines from the 31st MAU extracted a total of 287 people from the American Embassy, using a series of helicopter relays. By 1230 hours all participants, including military and civilian personnel, were safely aboard ship.[11]

Operation FREQUENT WIND (April 29-30, 1975): Evacuation of American and Vietnamese uniformed personnel and civilians.

Planning for an evacuation from Vietnam had begun as early as November 1972, when GEN Frederick Weyand, Commanding General (CG), US Military Assistance Command, Vietnam (MACV) issued COMUSMACV Operations Plan (OPLAN) 5060-A. Weyand's comprehensive plan for both Non-Combatant Emergency and Evacuation (NEMVAC) and directives for the Emergency and Evacuation (E&E) of the American Embassy (AMEMBASSY), Saigon, and included extensive interagency coordination. Participating organizations included the US Diplomatic Mission, Vietnam; Military Sealift Command (MSC), Military Airlift Command (MAC), the US Pacific Fleet (USPACFLT) and US Pacific Air Force (USPACAF). OPLAN 5060-A noted a key assumption regarding the Republic of Vietnam (RVN) forces:

> The Republic of Vietnam Armed Forces and civil police forces will assist in the protection of US personnel and property . . .. The Republic of Vietnam military forces will provide necessary support and authorize use of applicable departure facilities.[12]

The Chief of the Diplomatic Mission responsibility for the NEMVAC of all civilians and non-combatants: Under the AMEMBASSY Saigon E&E Plan, MACV was assigned to operate in support of these efforts. The plan consisted of four, sequenced phases. The State Department retained responsibility for the first three:

---

[11] Urey, *Operations Eagle Pull and Frequent Wind,* xii-xv, 4, 66-71; Edward J. Marolda, "Chapter 5. The Final Curtain" *By Sea, Air, and Land* https://www.history.navy.mil/content/history/nhhc/research/library/online-reading-room/title-list-alphabetically/b/by-sea-air-land-marolda/chapter-5-the-final-curtain-1973-1975.html.

[12] Department of the Army, *United States Military Assistance Command Vietnam: COMUSMACV OPLAN: 5060-A* (San Francisco: Headquarters, USMACV, 1972), 2-3.

- Phase I: Public Condition Warning
- Phase II Evacuation Ordered
- Phase III: Closure of US Diplomatic Mission
- Military Control Condition

The final condition was the most concerning and was described as:

> [When] combat operations have been initiated or are believed to be imminent . . . the Chief of the Diplomatic Mission has requested COMUSMACV to assume control over non-combatant evacuations. Protection and support of non-combatants has been passed from the State Department control to COMUSMACV control. State Department posts may operate with skeleton staffs or be closed.[13]

As part of the military drawdown in March 1973, GEN Weyand disestablished MACV and passed responsibility for planning and control of OPLAN 5060-A to USCINCPAC. In early April 1973, ADM Maurice F. Weisner, Commander in Chief of the Pacific Fleet (CINCPACFLT), directed a revised version of OPLAN 5060-A, which received the code name "TALON VISE" later changed to "FREQUENT WIND"[14]

ADM Maurice F. Weisner approved the final version of FREQUENT WIND was approved by ADM Weisner in July 1974 and centered on the evacuation of 10,000 refugees from four regional locations. The plan consisted of four options, designed to meet multiple contingencies:

- Option I: Evacuation, under the direction of the Ambassador, using all available commercial surface and air transportation means.
- Option II: Employment of military fixed-wing transport platforms
- Option III: Use of ships from the MSC fleet
- Option IV: Movement through a combination of fixed-wing aircraft and military vessels[15]

By late March 1975, the situation in Vietnam was deteriorating and the OPLAN was revised accordingly. These changes included the creation of a fifth option designed to evacuate more than 200,000 refugees from the Republic using military air and sealift. The assumption from the OPLAN published in 1972 that "the Republic of Vietnam military forces will provide necessary support" proved faulty as North

---

[13] *OPLAN: 5060-A*, C-3.

[14] Urey, *Operations Eagle Pull and Frequent Wind*, 3-4.

[15] Urey, *Operations Eagle Pull and Frequent Wind*, 10. ADM Maurice F. Weisner served as CINCPACFLT 1973-1976.

Vietnamese Army (NVA) units pushed aggressively into the South, battling through South Vietnamese defenses.[16]

In mid-April, a US Navy Task Force, TF 76 and three Task Groups readied for NEMVAC operations. TF 76 and its three task groups consisted of a dozen vessels and the 9th Marine Amphibious Brigade (TF 79.1). Two other task forces, operating in the South China Sea, provided air cover and additional logistical support. Evacuation of US civilians and dependents from Vietnam had begun on April 22, and as North Vietnamese (NVA) forces began to encircle Saigon on April 29, President Gerald R. Ford ordered the evacuation of the embassy. [17]

Ambassador Graham Martin had resisted developing any evacuation plans until that day. When the CIA Station Chief believed the fall of Saigon was imminent, he advised the Ambassador to begin planning, but Graham remained hesitant. "No Frank [Snepp], it's not so bleak, and I won't have this negative talk." Martin's challenge, Foreign Service Officer Joseph McBride argued, was not starting a stampede by local civilians. "Ambassador Martin's concern, very clearly, up to now was that once we started an official evacuation, it's pretty obvious that the game is over." [18] McBride also pointed out that Martin had lost his son in combat in Vietnam and was loathe to abandon the country. Ambassador Martin ordered all non-essential government employees to leave Saigon in early April. They departed on military fixed-wing aircraft that had been delivering supplies to Tan Son Nut Airport. Between April 21-28, these aircraft flew 42,910 people to safety; fewer than 3,000 of these were US citizens.[19]

The evacuation was originally planned to operate from the defense attaché office Dao compound at Thomson at airport. But when intelligence revealed that NVA forces were massing for an attack, and then the airport came under attack from artillery and aircraft, the plan to evacuate from the airport was abandoned. The only remaining option used helicopters from the embassy. The estimated evacuation requirements for Saigon or the reverse of that from Phnom Penh. The original planning factor called for evacuating 100 people, but nearly 2,000 arrived at the embassy. The US Marine

---

[16] Urey, *Operations Eagle Pull and Frequent Wind*, 11.

[17] The USS *Blue Ridge* served as TF 76's command ship. Vessels in TG 76.4 (Movement Transport Group Alpha) included the USS *Okinawa*, USS Vancouver, USS Thomaston, and USS Peoria. Ships assigned to TG 76.5 (Movement Transport Group Bravo) were the USS *Dubuque*, USS *Durham*, and USS *Frederick*. The USS *Anchorage*, USS Denver, USS *Duluth*, and USS *Mobile* were all part of TG 76.9 (Movement Transport Group Charlie). Marolda, *By Sea, Air, and Land.*

[18] US Ambassador Graham Martin to CIA Analyst Frank Snepp, April 1975; Joseph McBride, State Department Officer, Interview with Rory Kennedy, *Last Days of Saigon*.

[19] Urey, *Operations Eagle Pull and Frequent Wind*, 65-68.

contingent at the DAO, as well as the people already gathered there also needed to be evacuated.

The decision to evacuate came at mid-morning on April 29, 1975, much too late to enable a safe and smooth evacuation. This restricted the time available to move security forces in, and reduced evacuation options with the loss of Tan Son Nut airport. From April 29 – 30,1975, USMC and USAF helicopters evacuated 1150 US citizens and more than 6,000 Vietnamese, in 764 sorties.[20]

[20] Urey, *Operations Eagle Pull and Frequent Wind*, 65-68.

Refugee Operations

Operation NEW LIFE (April 23- November 1, 1975) - Guam: Transient resettlement of Vietnamese refugees on Guam for onward movement to CONUS.

The IATF tasked the Department of Defense to:

- Provide transportation
- Operate refugee reception centers in the Pacific and CONUS
- Assist civilian agencies in the resettlement program as required

DOD assigned the missions in the Pacific to Commander in Chief, Pacific (CINCPAC), Admiral Noel A.M. Gayler, who directed the establishment of the Refugee Evacuation Center in Saigon under the control of the Defense Attaché Office (DAO) to assist in the management of US support of refugees. This Refugee Evacuation Center later provided the cadre for the operational staff that planned and coordinated the evacuation from Saigon to Guam and Wake Island, identified as safe havens in the Pacific. CINCPAC then tasked MG Donnelly P. Bolton, Commander, US Army CINCPAC Support Group (USACSG), to establish the refugee support center in Guam. in what was to be called Operation NEW LIFE. Army support for Guam was drawn from Hawaii, Korea, Japan, and CONUS. The Wake Island refugee facility was operated by a civilian contractor under the mission management of Commander in Chief, Pacific Air Force. In Guam, the Air Force operated a refugee center at Andersen AFB and the Navy operated a camp at Asan Annex. CINCPAC/MAC would move designated evacuees from Southeast Asia to CONUS ports of entry; and the military departments were to develop plans and procedures to accommodate the evacuees in CONUS. [21]

On April 22, 1975, MG Bolton ordered the Commander, 45th Support Group at Fort Shafter, Hawaii, to deploy his headquarters to Guam to establish a refugee reception center at Orote Point on board Naval Base Guam. The Navy ran a second camp at Asan Annex, which had previously been a naval hospital. The 45th Support Group formed Task Force New Life, which eventually numbered some 2,000 soldiers. It included 1st Bn, 5th Infantry, 25th Infantry Division with an attached Women ‘s Army Corps (WAC) detachment, the first such deployment of WACs with and Infantry unit. The 1st Medical Group (-) deployed from Fort Sam Houston, Texas, along with several other units from Hawaii and CONUS. Individual members of the 411th Engineer Battalion (USAR), located on Guam, also volunteered for Active Duty for Training (ADT) (See Fig. 2).[22]

---

[21] ODCSOPS AAR, I-A-2,3; I-B-4. US Army CINCPAC Support Group (2-star) was created in 1974 when CINC, USARPAC (4-star) was disestablished.

[22] ODCSOPS AAR, I-B-4,5.

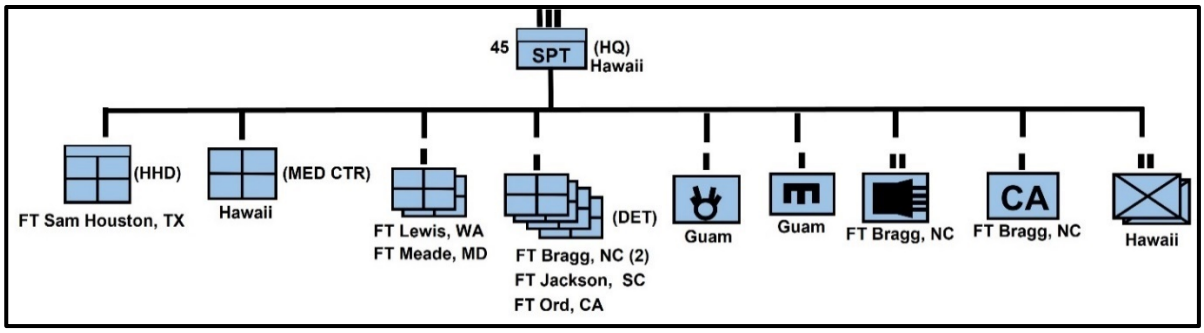

Figure 2-TF New Life -- Orote Point, Guam[23]

Soldiers from the 45th Support Group erected the tents, mess halls, aid stations, and hospitals, and other support facilities at what was to become the Orote Point Refugee Center. By the time the task force was in place, refugees were arriving and as the population increased, additional support troops were needed.[24]

Scheduling and coordinating arrivals and departures fell on the 25th Infantry Division Movement Control Officer who was attached to the 45th Support Group to perform the same mission. 1LT Richard A. Cody coordinated airlift, sealift, and ground transportation for Operation NEW LIFE in Guam. He later remembered:

> It was remarkable to me to see how flexible infantry, Transportation Corps units, ordnance units, and others set up a city overnight. There was something like twenty-five hundred GP Larges [tents] put up along the runway. We set up a complete dining facility where we could feed 50,000 people. We had naturalization; we had post office; we had money exchanges. The first 4- or 5,000 that came out came out with a lot of money and treasure and stuff like that. How we handled those Vietnamese and got them to the right place was something else. [25]

Federal agencies were charged with processing the refugees, with the military performing the logistical support. Refugee operations on Guam progressed at a rapid pace due to the approaching typhoon season. Of the more than 133,000 refugees who passed through the reception facilities on Guam, the Army-run Orote Point center processed most of them during the period April 23 to June 24, 1975, the number of

---

[23] ODCSOPS AAR, V-B-2.

[24] ODCSOPS AAR, I-B-5. Travis Air Force Base was designated as a transit facility with a capacity to accommodate up to 1,000 refugees for 20 hours.

[25] GEN Richard A. Cody, Senior Officer Oral History Program (hereafter SOOHP) interview by Dr. Douglas V. Johnson II, Oct 11, 2011, 20. GP Large referred to a general-purpose tent, 16' x 52', which could house 60 people.

refugees in the PACOM area began to decline as the CONUS refugee reception centers became operational, and Army support elements began to redeploy in June. Task Force New Life completed its mission in Guam on July 3, 1975, and departed, leaving a small number of food service personnel who remained to assist the continuing US Navy support at Asan Annex.

Operation NEW ARRIVALS (Apr 29-Dec 20, 1975): Permanent resettlement of Vietnamese refugees in the United States and other countries.

The Department of Defense tasked the Services to nominate military facilities as potential refugee reception centers. DOD selected one from each service: Camp Pendleton, California; Fort Chaffee, Arkansas; and Eglin Air Force Base, Florida. This theoretically spread the mission among the services, but the Army still ended up with the largest share. It also spread the refugees geographically, which made the mission a little more politically acceptable. Shortly after the operation began, the refugee population on Guam reached capacity and in view of the approaching typhoon season, the Army decided to open a fourth CONUS refugee reception center located at Fort Indiantown Gap, Pennsylvania. A planned fifth center, Camp X, would also have been operated by the Army if needed. GEN Bernard Rogers, CG, US Army Forces Command (FORSCOM), assumed responsibility for the Army refugee reception centers in CONUS. Each center used a combined task force with both military units and civilian agencies. The military was responsible for billeting, messing, medical support, and the security of the refugees, while the civilian agencies managed processing and resettlement.[26]

Camp Pendleton

The phased opening of the CONUS reception centers still allowed little time for preparation. Camp Pendleton opened first due to its location and because it could accommodate refugees initially under hard cover (barracks and Quonset huts). Additionally, it was an active Marine Corps installation and thus had support troops immediately available. It also had support facilities in place and operational, such as a hospital, commissary, and other support facilities.

Fort Chaffee

Fort Chaffee, a semi-active sub-installation of Fort Sill, boasted a normal post complement consisting of sixty-two military and civilian personnel. The mission would eventually require a total of 1,800 support troops of all types, including medics, cooks, clerks, military policemen, and other specialists. Support facilities such as the hospital needed to be opened and food service facilities activated. HQDA designated BG

---

[26] ODCSOPS AAR, x-xi, I-A-6, Camp X was later identified as Fort Pickett, VA.

James W. Cannon (CG, III Corps Artillery) as Commander, Task Force NEW ARRIVALS. He arrived at Fort Chaffee on April 28 with about 300 troops to prepare the installation for the initial receipt of refugees. On the same day, FORSCOM alerted Commander 46th Support Group (Corps) for immediate deployment to Fort Chaffee. The Group headquarters departed Fort Bragg 12 hours later and arrived at Fort Chaffee on April 29, 1975, and was fully operational the next day, assuming duties as the task force headquarters. The first group of refugees arrived on May 2, 1975 (see Fig. 3).[27]

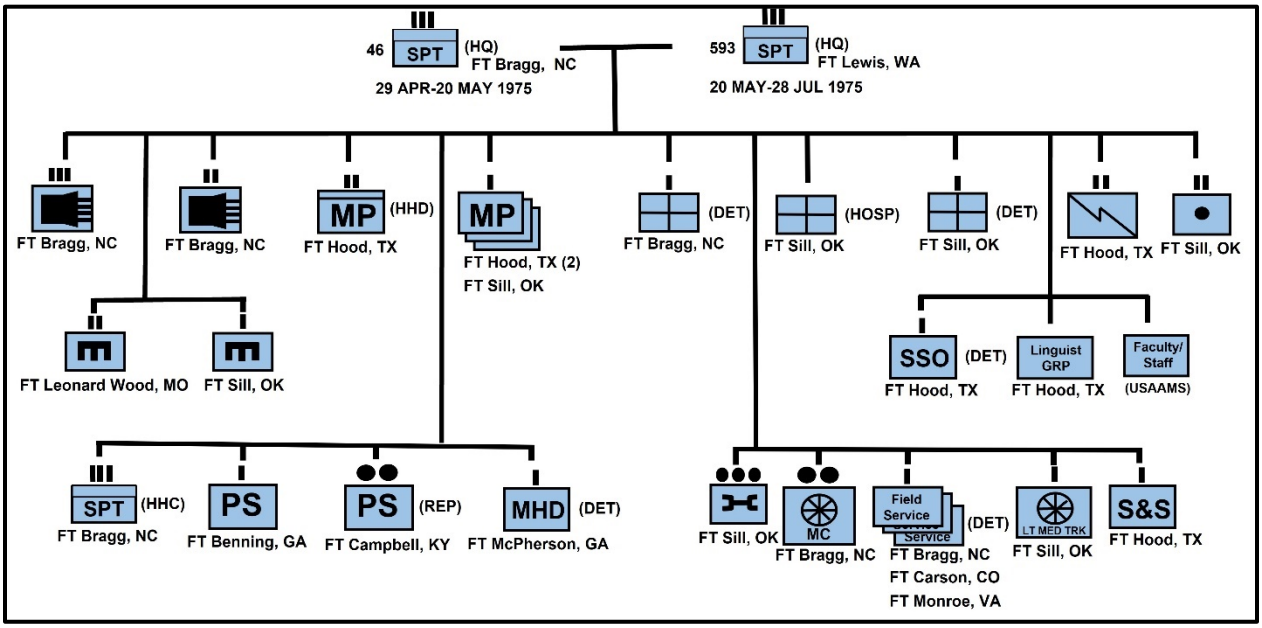

Figure 3-Task Force NEW ARRIVALS - Fort Chaffee[28]

Most buildings at Fort Chafee were closed, and the hospital was in mothballs as part of the war reserve stocks. One of the earliest actions necessary was an evaluation of the environmental impact of the from additional sewage being introduced into the local disposal system. This question was of immediate concern because of the threat of pollution in the streams that run through and border on Fort Chaffee. The 5th Engineer Battalion from Fort Leonard Wood, MO, arrived on May 1 to begin work upgrading the sewage system. The engineers then prepared the wooden, World War II-style, open-bay barracks for families by installing movable partitions and rearranging the furnishings. A typical two-story barracks housed 80-90 people when reconfigured into

[27] ODCSOPS AAR, I-B-9,10; Headquarters, 46th Support Group (CORPS), *After Action Report: Operation NEW ARRIVALS* - Fort Chaffee, Annex H, May 19, 1975. Hereafter, 46th SG AAR.

[28] ODCSOPS AAR, V-B-2

family or group living spaces. Washing machines and dryer were installed in some of the barracks buildings, and several small company-sized mess halls were converted into laundries equipped with washers and dryers. One of the essential missions for the task force was health support to population that had experienced extreme privation. The engineers quickly opened the "mothballed" World War II-era hospital at Fort Chaffee to get it functioning again. Since it was in or war reserve status, the equipment inside was fully operational.[29]

Eglin Air Force Base

On April 28, 1975, officers at Eglin Air Force Base (AFB), Florida received notification that the location was selected to serve as a refugee center as part of Operation NEW ARRIVALS. That same day, staff from the US Air Force Armament Development and Test Center (ADTC) selected Auxiliary Field No. 2 (Pierce Field) as the location for the camp. Two days later, Airmen from the 823 Civil Engineering Squadron (Heavy Repair) began construction on the camp, which was expected to house up to 20,000 refugees. Maj. Gen. Howard M. Lane, commanding general (CG) Tactical Air Warfare Center (TAWC) was appointed as commander, "New Horizon [NEW ARRIVALS] Task Force (NATF)." The ADTC, TAWC, and Tactical Air Command (TAC) provided uniformed support personnel to the NATF; the 9th and 12th TACs were alerted to provide additional resources. To augment the uniformed service members, civilian personnel from the Department of Health, Education, and Welfare (HEW); Immigration and Naturalization Service (INS), the American Red Cross (ARC), and Social and Rehabilitation Services (SRS) landed on May 2; the combined staff numbered more than 1,600 personnel. NATF opened a third CONUS reception center on May 4, 1975, with a tent city with an initial capacity of 2,500. Two days, later the first flight of 373 refugees touched down at the Eglin AFB. By mid-September, when operations ceased at the air base, more than 8,600 refugees had transited and been processed through the camp.[30]

Fort Indiantown Gap

As the tempo of the refugee operations accelerated in early May, the Pacific area refugee centers approached the saturation point. Guam was nearing capacity with

---

[29] ODCSOPS AAR, I-C-1.

[30] United States Air Force, *Operation NEW ARRIVALS: Phase I- The Buildup, 27 April 1975 – 23 May 1975, Part One in One Volume* (Eglin Air Force Base: Office of History, 1975), 1-5. https://apps.dtic.mil/sti/pdfs/ADA017703.pdf; Government Accounting Office, *Report to the Congress: Evacuation and Temporary Care Afforded Indochinese Refugees- Operation New Life* (Washington: Government Printing Office, 1976), 30. https://www.gao.gov/assets/id-76-63.pdf After several reorganizations, the ADTC is now the 96th Test Wing.

more refugees arriving daily. The flow into and out of CONUS centers was not proceeding at the anticipated rate. Planners had expected the refugees to move through the reception and resettlement system much faster than the actual situation demonstrated, a situation which was compounded by various administrative problems that surfaced as delays in refugee out-processing. Some refugees elected to be relocated to third countries that offered to resettle them, but these numbers were limited. In addition to the capacity challenges, planners also became concerned about the approaching typhoon season in the Pacific. [31]

The efficient transportation of refugees from Guam to CONUS soon outstripped the existing capacity of the refugee camps. On May 12, 1975, the Commander, Military Airlift Command suspended flights for three days to allow the reception centers to catch up. HQDA ordered TF NEW ARRIVALS at Fort Chaffee, already at maximum capacity, to temporarily increase capacity. TFNA did so by converting administrative buildings to barracks. This was not enough, however, and on May 19, 1975, FORSCOM directed BG Cannon and the Commander, 46th Support Group to deploy to Fort Indiantown Gap, PA (FIG), establish another Refugee Center and be prepared to receive refugees NLT May 26, 1975. The 46th Support Group headquarters was operational at FIG on May 22, 1975. FORSCOM alerted 593rd Support Group (Corps) at Fort Lewis, WA to deploy to Fort Chaffee to backfill the 46th SG. The first group of refugees arrived on May 28 (See Figs. 3-4).[32]

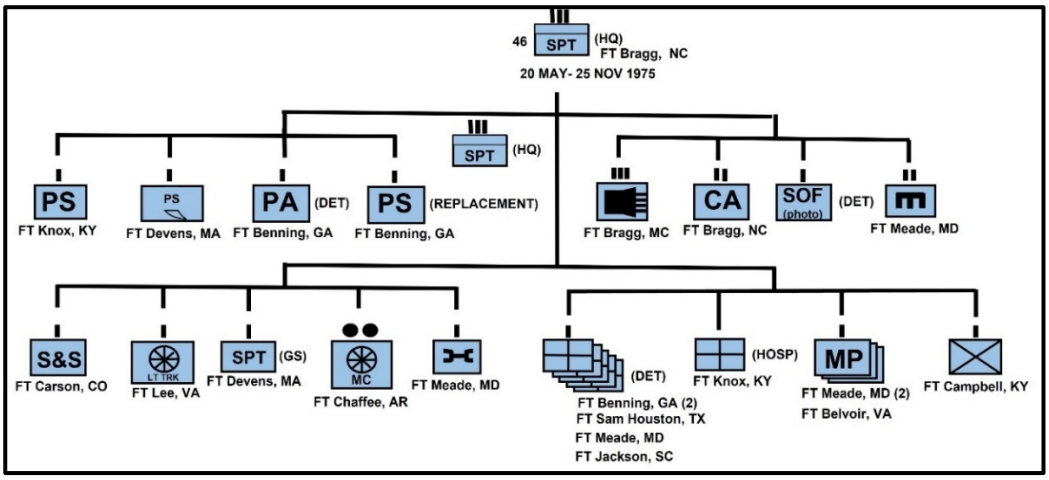

[31] ODCSOPS AAR, I-B-11.

[32] ODCSOPS AAR, I-B-12: Message, Military Airlift Command to Multiple Addressees, 10 MAY 1975, subj.: Operation New Life.

Figure 4 - TF NEW ARRIVALS -- Fort Indiantown Gap, PA[33]

By the end of 1975, more than 133,000 refugees had entered the United States under Operations NEW LIFE and NEW ARRIVALS. The Army processed 72,843 (55%) of the refugees for resettlement at Fort Chaffee (May 2--DEC 20, 1975) and Fort Indiantown Gap (May 28 -Dec. 15, 1975). The peak monthly populations are indicated in Figure 5).[34]

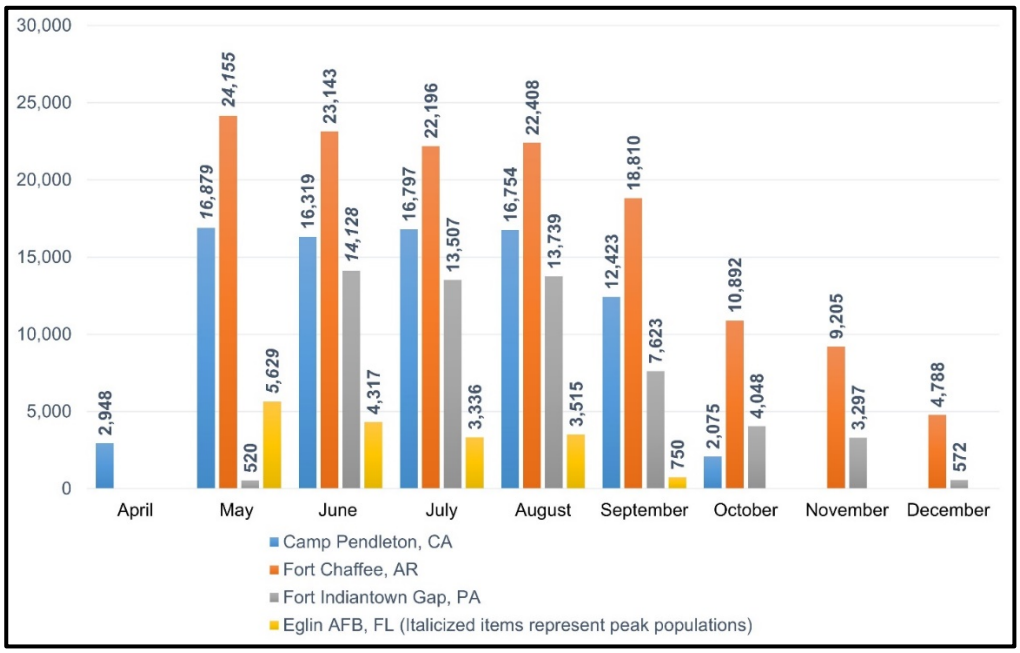

Figure 5- CONUS Refugee Center Populations: April-December 1975[35]

[33] ODCSOPS AAR, I-A-7, V-B-3.

[35] General Accounting Office, *Evacuation and Temporary Care Afforded Indochinese Refugees-Operation New Life* (Washington: Government Printing Office, 1976), 30.

Refugee Reception Centers – Support Operations

More than 8,000 members of the Total Army participated in Operations NEW LIFE/NEW ARRIVALS. As the Army withdrew from Vietnam War and began to drawdown and the draft ended, Army Chief of Staff GEN Creighton W. Abrams promulgated the All-Volunteer Force (AVF). The struggle to develop a professional volunteer Army resulted in critical shortages in many MOSs. Some of them were in low density MOSs, which caused Army-wide problems.

Subsistence Support

The feeding of the refugees was not difficult, but there were challenges such as ensuring everyone was fed during the mess hours. Consolidated messes serving larger groups alleviated this problem. There were a few company-size messes, but most of the approximately 66,000 daily meals (peak capacity) were served in the consolidated messes.

An Army-wide shortage of cooks became one of the biggest challenges. During the start-up phase of center operations, Army cooks and mess supervisors staffed the mess facilities. Cooks were deployed individually from all over the Army and formed into a provisional “cook company” at Fort Chaffee. As soon as contractual food service could be negotiated, mess operations were awarded to a civilian firm that provided cooks, kitchen helpers, and supervisors, alleviating the problem. Senior military food service personnel remained available at the command level for supervision and inspection of the contract services. Some refugees also volunteered to advise on adapting menus and preparing food in a fashion suited to the diet and tastes of the evacuees.[36]

Linguist Support

The 4th Psychological Operations Group from Fort Bragg deployed detachments to Fort Chaffee, Fort Indiantown Gap, Eglin Air Force Base, and Guam to prepare printed leaflets, signs, menus, and daily newspapers for the benefit of the Vietnamese and Cambodian refugees in their native languages. This action allowed the refugees to know what was going on in the outside world. Daily Vietnamese/English newspapers also helped prepare the refugees for what was to come by introducing them to information about their new life in the United States and American customs. The newspapers were an important part of a large educational effort conducted at both Army reception centers.[37]

---

[36] ODCSOPS AAR, I-C-2.

[37] ODCSOPS AAR, I-C-11.

English Language Training

The Army decided early on to be open and candid about what was being done at each location and to allow access to the refugees for interviews. The initial conception of what might be needed for instructional programs assumed that the refugees would not be in the centers very long and that only rudimentary English for the head of the household was required. These were poor assumptions. While more than one third of the heads of household professed a good command of English, the fraction of all refugees possessing this skill was much lower (see Fig. 6) The refugee centers needed a long-term educational program that embraced the entire refugee population. Spoken and written English formed the core of the curriculum in this program. Reading, mathematics, and history were used as aids to the fundamental objective of helping as many refugees as possible to speak and comprehend English. Military personnel at the Army centers taught English along with civilian instructors in both formal and informal settings. This extensive and educational program for all age groups was conducted to prepare the refugees for the life they were to face when leaving the reception centers. [38]

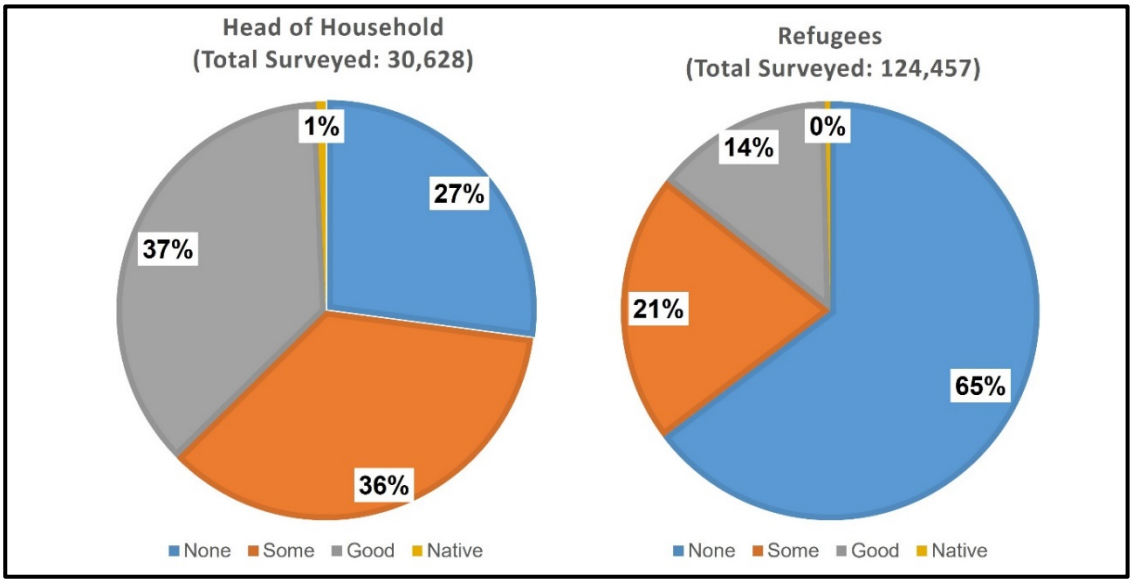

Figure 6-Vietnamese Refugee English Language Skills[39]

[38] ODCSOPS AAR, I-C-12.

[39] Department of Health Education and Welfare, *HEW Task Force for Indochina Refugees: Report to Congress March 15, 1976* (Washington: Government Printing Office, 1976), 28.

Joint Refugee Information Clearing Office (JRICO)

The Joint Refugee Information Clearing Office (JRICO) was established under ODCSPER auspices and staffed jointly by Reservists, with the Army element of JRICO comprised of USAR soldiers on Active Duty for Training (ADT). JRICO provided all information on the location, sponsorship, and resettlement of refugees.

Interagency Task Force for Indochinese Refugees (IATF)

Preparation and Planning for Refugee Operations

On April 18, 1975, President Gerald R. Ford created the Interagency Task Force for Indochina (IATF) to coordinate all US Government evacuation activities and address the needs of receiving and resettling these evacuees. This program, which allowed the refugees to be admitted into the United States under the parole authority of the Attorney General, was funded by the Indochina Migration and Refugee Act of 1975, which authorized $305 million for the Department of State and $100 million for the Department of Health, Education, and Welfare (HEW). Ford appointed Ambassador L. Dean Brown as his Special Representative for Indochinese Refugees, and Director of the IATF. Brown immediately established a small staff of officers from various federal agencies working in the State Department Operations Center. IATF consisted of senior officials of the Departments of State; Defense; Justice; Health, Education, and Welfare (HEW); Transportation; Treasury; Labor; Interior; and Housing and Urban Development (HUD), plus representatives of the US Agency for International Development (USAID); US Information Agency (USIA); Central Intelligence Agency; Office of Management and Budget (OMB); and Immigration and Naturalization Service (INS). One month after the effort began, President Ford transferred the mission from State Department to the Department of Health, Education, and Welfare. Julia V. Taft, then serving as Deputy Assistant Secretary for Human Development, HEW, served as the Director, IATF, until end of mission on December 31, 1975, and completed Congressional reports for another two years on the ongoing mission.[40]

Department of Defense

The Secretary of Defense created a departmental level task force in April 1975 to oversee, monitor, and coordinate DOD activities in support of the Indochina refugee program, headed by Deputy Assistant Secretary of Defense (DASD) for East Asia and Pacific Affairs Morton I. Abramowitz. MG Charles R. Sniffin, Director of Operations, Office of the Deputy Chief of Staff for Operations and Plans (ODCSOPS), and the US Army Military Support Agency (later Military Support Division) ODCSOPS, coordinated the planning and operations. The planning for evacuating orphans from Cambodia and

---

[40] *Indochina Migration and Refugee Act of 1975*, Public Law 94-23; *Appropriations for special assistance to refugees from Cambodia and Vietna*m, Public Law 24-24. The Department of Education Organization Act of 1979 separated the education mission from the Department of Health, Education, and Welfare (HEW) which was renamed the Department of Health and Human Services (HHS); ODCSOPS AAR, I-A-3,4. Indochina was/is a geographic term commonly used to refer to the former French colonies of Cambodia, Laos, and Vietnam, which together made-up French Indochina.

Vietnam laid the groundwork for the massive surge of refugees to come. At the national level, preparations for refugee operations began to take shape.[41]

This plan, initially called Operation COMPASSION (later renamed Operation NEW LIFE), envisioned that the refugees would be evacuated to predesignated safe haven centers in the Pacific. Safe Haven missions:

- Medically screening and treatment if necessary
- Reuniting families if possible
- Administrative processing for movement to the continental United States

Upon arrival in CONUS, they would move to one of three (later four) military installations whose role would be to receive refugees and support them logistically while the appropriate US Government agencies arranged for their eventual resettlement. [42]

Immigration Authority

While the organizational framework for the refugee support was being developed, the Attorney General granted the admission of some 150,000 Indochinese refugees into the United States. Refugee asylum is codified in the US Immigration and Naturalization Act of 1952, which gives the Attorney General authorization to parole into the US any alien on a temporary basis because of an emergency or other reasons that are in the public interest. This permitted the Vietnamese and Cambodian evacuees (and later, Laotian) to enter and reside in the United States without fear of expulsion or deportation, although they remained nonresident aliens. [43]

Resettlement Processing

Civilian government agencies were assigned to do resettlement processing, assisted by volunteer agencies (VOLAGs). The sheer volume of refugees and the lack of time to prepare, however, made it impossible for the civilian agencies alone to manage the processing so the Army assisted. Processing support included meeting incoming aircraft and providing individuals with identification, as well as screening refugees regarding their job experience to determine their employment opportunities. This work kept the system from failing during the early days.

---

[41] ODCSOPS AAR, I-A-6, I-B-1. Morton Abramovitz was a career Foreign Service Officer who had served as Political Advisor to USCINCPAC 1973-1974, and DASD 1974-1978. He later served as US Ambassador to Thailand. MG Charles R. Sniffin retired in 1981 as DCG, Sixth US Army.

[42] ODCSOPS AAR, I-B-4.

[43] ODCSOPS AAR, I-A-4,5.

The composition of the civilian component of Task Force NEW ARRIVALS, the counterpart to the military organization, comprising the US Government agencies and voluntary agencies (VOLAGs) that conducted the resettlement and sponsorship missions is shown at Fig. 7. These civilian groups established procedures designed to expedite the movement of refugees from reception and screening stations through sponsorship/resettlement stages of the processing chain with maximum efficiency.[44]

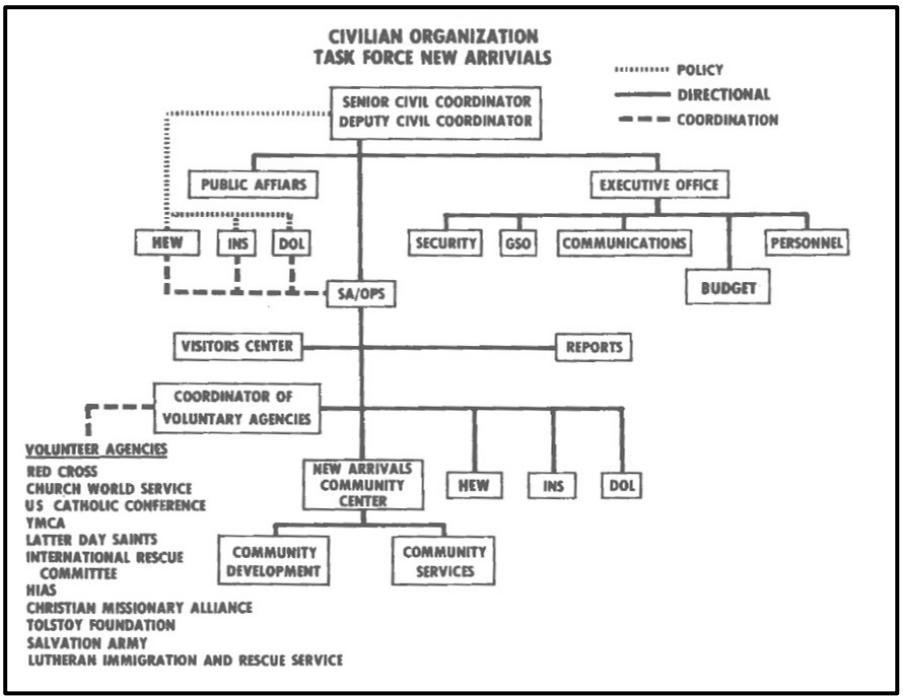

Figure 7 -- Civilian Organization for TF NEW ARRIVALS[45]

Refugee Processing

The task force developed a 21-day processing cycle for refugees, but this was an ideal template rather than a typical experience. The process could be slowed at any point for a variety of reasons. Most refugees had escaped Vietnam without any paperwork that would help them establish residency, so the task force needed to create alien documents that could be used. Any planning for future operations should assume that processing will be delayed (see Fig. 8).

---

[44] ODCSOPS AAR, I-C-6.

[45] ODCSOPS AAR, V-C-13.

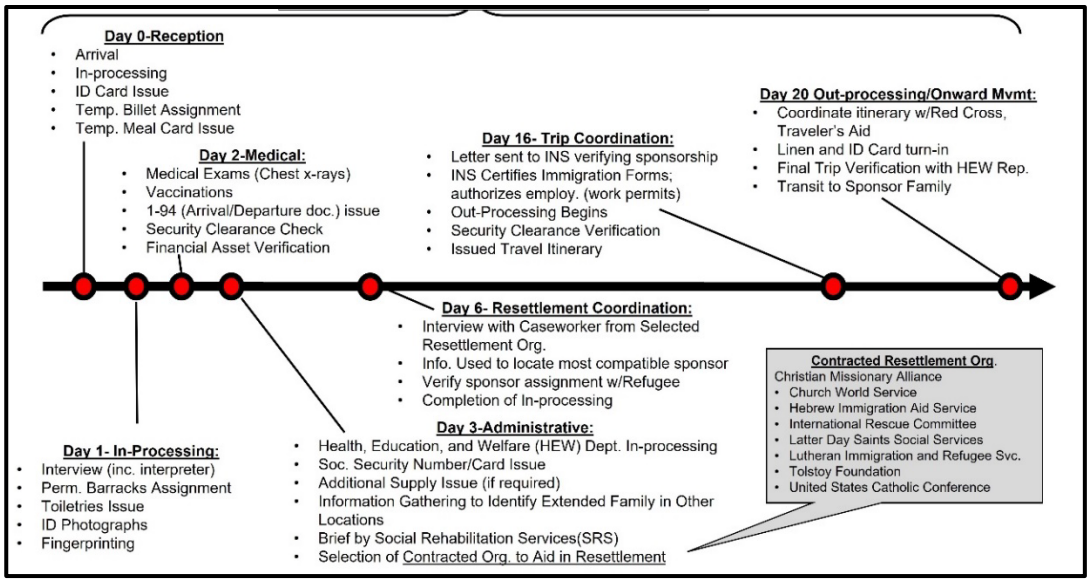

Figure 8-Refugee Processing Timeline[46]

Refugee Demographics

The images of despondent and ill-clad refugees overcome by dire and rapidly changing circumstances can often lead to misperceptions about the education and professional levels of displaced populations. As part of a larger effort to resettle fleeing Vietnamese individuals and families, the Department of Health, Education, and Welfare (HEW) commissioned a series of interviews at refugee centers with immigrants between November 1975 and December 1978. The first set of meetings, conducted between November and December 1975, involved the initial wave of people fleeing the collapse of the Republic of Vietnam. The Vietnamese refugees' demographics skew young, with 90 percent under 45 years of age. Of those, they were nearly evenly divided between the prime working ages of 18 to 45 and 0 to 17. Remarkably, they were also nearly evenly divided bigender (see Fig. 9).

[46] ODCSOPS AAR, I-C-6 through I-C-10.

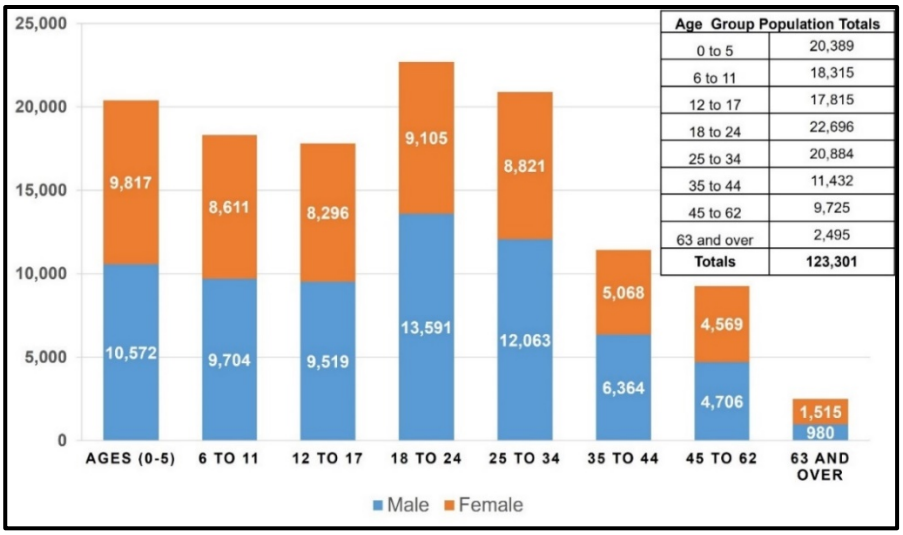

Age Group Population Totals	
0 to 5	20,389
6 to 11	18,315
12 to 17	17,815
18 to 24	22,696
25 to 34	20,884
35 to 44	11,432
45 to 62	9,725
63 and over	2,495
Totals	**123,301**

Figure 9- Vietnamese Refugee Age & Gender Demographics

Analysis of the data collected during these interviews revealed that ten percent were university graduates, 40 percent had completed secondary schools, and another 15 percent finished elementary school; only 20 percent had no formal education. Occupational statistics revealed that more than two-thirds of the interviewees held white collar occupations (i.e., educated professionals, management, clerical work, and sales), while 44.5 percent of the blue-collar work force were craftsmen and an additional 10 percent worked in transportation. The Department of HEW collected information demonstrating that most of the people interviewed were educated and held corresponding professional or highly skilled occupations before the Communist takeover of their country. These numbers also help to dispel the misperceptions that war refugees were all poor and uneducated and reveal an immigrant population with the knowledge and experience to help contribute to their new society (See Fig. 10).[47]

[47] Robert E. Marsh, "Socioeconomic Status of Indochinese Refugees in the United States: Progress and Problems, *Social Security Bulletin*, October 1980/Vol. 43, No. 10. https://www.ssa.gov/policy/docs/ssb/v43n10/v43n10p11.pdf

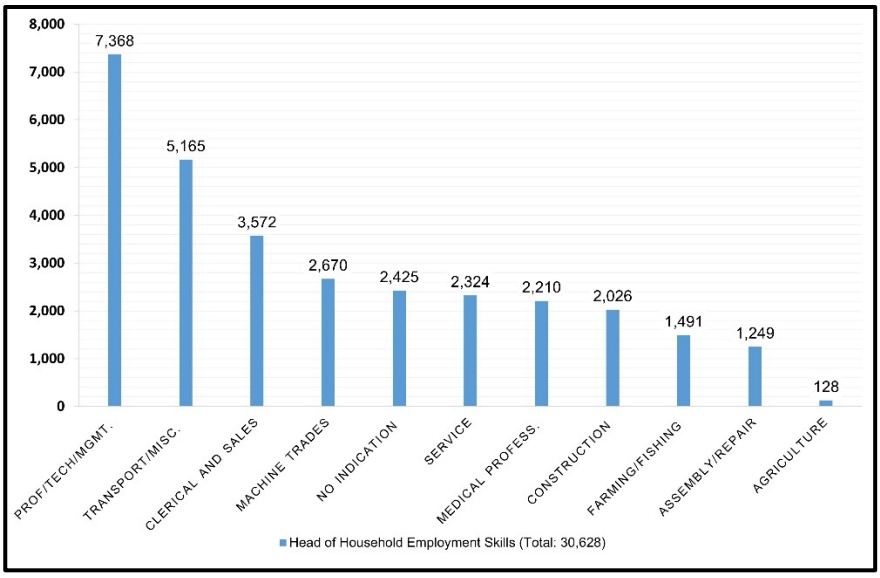

Figure 10-Head of Household Employment Skills- Vietnamese Refugees[48]

Repatriation

The majority of the 133,000 thousand refugees who entered the United States chose to stay but some 400 asked to return to Indochina while still in the reception centers. About 1,400 refugees in Guam decided to return to Vietnam and began peacefully demonstrating for repatriation in June. Repatriation was offered as an alternative to all refugees from the beginning of the evacuation and resettlement program, and this was publicized throughout each refugee reception center. No evacuee was forced to remain in the United States. Representatives of the United Nations High Commissioner for Refugees (UNHCR) visited Orote Point, Guam, Fort Chaffee, and Fort Indiantown Gap to ensure that refugees understood the administrative steps necessary for repatriation. [49]

When some refugees began demonstrating at Fort Chaffee and Camp Pendleton, the IATF consolidated all CONUS refugees requesting repatriation at Camp Pendleton. IATF then designated Asan Camp, Guam, as the holding point for the repatriates until UNHCR could negotiate an agreement for their reentry into Vietnam and moved all repatriates there. The demonstrations turned violent in September, with escalating threats and burning of two buildings at Asan Camp. After this, DOD prepared to control the situation under the provisions of Operation GARDEN PLOT, the Department of the Army civil disturbance plan. The senior naval officer on Guam was

---

[48] *HEW Refugee Task Force, March 15, 1976,*

[49] ODCSOPS AAR, I-C-13.

appointed as the civil disturbance control task force commander, and the Army Staff sent two civil disturbance advisers to assist him in planning. Fortunately, the government was able to reach a resolution for the repatriation before use of military force became necessary.[50]

Several of the ships used for the evacuation remained in the harbor at Guam. The US Navy outfitted the Vietnamese maritime vessel *Thuong Tin I* with full provisions of food, medical supplies, and fuel for the voyage to Vietnam. The refitted ship sailed on October 16, 1975, with a crew of former Vietnamese naval and merchant seamen with a total of 1,546 repatriates. The ship reportedly arrived safely in South Vietnamese waters and the repatriates were allowed to disembark. [51]

At Fort Indiantown Gap, a small group of about 120 Cambodians refused to accept sponsorship arrangements and requested that they be repatriated. UNHCR representatives attempted to communicate with Cambodian officials, but the Khmer Rouge regime refused. The UNHCR the relocated them to a halfway house in Philadelphia until they were sent to France in 1976, where they hoped to contact Cambodian officials. There is no confirmation whether either the Vietnamese or the Cambodian people survived their repatriation.

---

[50] GARDEN PLOT was the name used for both the DOD and DA plans. Since DA was the Executive Agent for the DOD plan, the plans were essentially identical. The plan was last used in 1992 for the LA riots. GARDEN PLOT was superseded by USNORTHCOM CONPLAN 3502, Civil Disturbance Operations, 31 July 2009.

[51] ODCSOPS AAR, I-C-15.

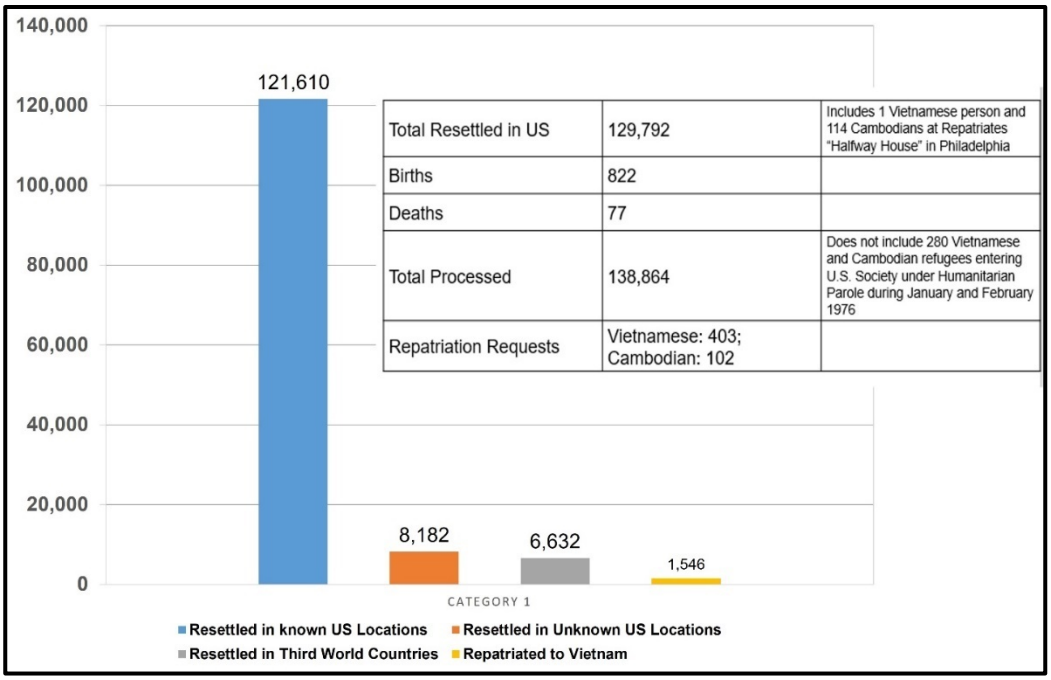

Total Resettled in US	129,792	Includes 1 Vietnamese person and 114 Cambodians at Repatriates "Halfway House" in Philadelphia
Births	822	
Deaths	77	
Total Processed	138,864	Does not include 280 Vietnamese and Cambodian refugees entering U.S. Society under Humanitarian Parole during January and February 1976
Repatriation Requests	Vietnamese: 403; Cambodian: 102	

Figure 11 - Operation NEW ARRIVALS Resettlement Statistics[52]

Termination of Army Supported Refugee Facilities

The IATF Director initiated planning in July to close the refugee centers by 31 December 1975. The plan called for the closing in the following order:

- Eglin Air Force Base (SEP 75) – to close first because of the threat of the prevailing severe autumn weather conditions prevalent in that section of Florida. Remaining unsponsored refugees would be transferred to Fort Chaffee.
- Camp Pendleton (OCT) -- Phased out by attrition as the evacuee input tapered off; remaining refugees to Fort Chaffee.
- Fort Indiantown Gap - November or early December
- Fort Chaffee – late December.

Fort Chaffee and Fort Indiantown Gap provided support to Reserve Components primarily during the summer months, so there was little requirement for heated barracks. For winter use by refugees, both installations needed modernized heating systems and other modifications that would ensure a healthy and comfortable atmosphere. The Army also began ordering winter clothing in August based on

[52] Department of Health Education and Welfare, *HEW Task Force for Indochina Refugees: Report to Congress* (Washington: Government Printing Office, 1976), 31.

projected strengths, but when the clothing was delivered, the population was much less than projections. The IATF worked with the Salvation Army to distribute the winter clothing to those refugees previously released through a mail order system based at Fort Chaffee. [53]

Though the military mission ended in December 1975, the process of resettling the refugees continued for another two years. Director Taft renamed the IATF the HEW Refugee Task Force beginning January 1, 1976 and made quarterly reports to Congress has until December 1977. Interagency Task Force Director Julia V. Taft recommended to President Ford that those who supported the operation be properly recognized. She recommended a joint civilian and military (IATF and DOD) certificate of appreciation and a military humanitarian service award. The Department of Defense endorsed the recommendation. President Gerald Ford, in one of his last acts in office created the Humanitarian Service Medal (HSM) by Executive Order 11965, 19 January 1977.[54]

---

[53] ODCSOPS AAR, I-D-1,2

[54] ODCSOPS AAR, III-F-1; Army Regulation 600–8–22, *Military Awards*, 5 March 2019, para. 2-24, p. 42.

Part II. Cuban Refugee Operations

Strong bonds of friendship existed between many of the Vietnamese refugees and their American former advisors and this, coupled with widespread compassion for those escaping a collapsing country, gave the Vietnamese in Cambodians an advantage in starting a new life in the United States. Even the names of the operations implied an optimistic and welcoming national attitude. While this attitude was not universal and refugees or not welcomed as warmly in all places, they generally experienced a smooth transition. This has enabled that generation of refugees and their children to assimilate into American life quickly, make contributions, and achieve success.

The Cuban and Haitian refugees who arrived in 1980 had a base of support among the Cuban American and Haitian American communities in South Florida, but they were not as widely supported throughout the country. The somewhat chaotic resettlement process reflected the US government's inconsistent policies. President Jimmy Carter initially authorized the immigration 3500 Cubans, and when thousands more landed in Florida, he extended them temporary protection as well. But when the number swelled to more than 25,000 with the addition of Haitian refugees, Carter then established a blockade to prevent boats from reaching Florida, though many did. Upon arrival in Florida, refugees were temporarily housed in the Miami Orange Bowl until FEMA for other agencies could help them unite with their families. Those who were deemed hard to place, which included those who had been released from mental institutions and jails as well as those who had no families in the area, were then shipped north to longer term resettlement camps operated by the military.

Despite having access to numerous after-action reports and lessons learned from Operation NEW ARRIVALS, the Army repeated some of the same mistakes from the previous mission and made new ones which failed to demonstrate any lessons learned. Compared to the 1975 mission, the Army invested much less effort into the Cuban Refugee mission. The government did not form an interagency task force as before, nor did the Army establish an operational name or task force. The Army attempted to limit involvement to Reserve Component units and headquarters. In 1975 the Army had committed three support group headquarters and associated subordinate units to the mission, totaling some 8,000 soldiers. The approach in 1980 was much different. The Army again assigned an active-duty Brigadier General to lead the mission but failed to deploy any active-duty units to assist. Moreover, the complex coordination missions fell on the Fort Indiantown Gap Garrison staff, which was neither structured nor staffed to manage this large mission. This led to difficulties in many areas. The Army attempted to staff requirements using Reserve Components units and individuals. This gave some Reserve units valuable training, though at the cost of much of their planned summer training. The deployment of military police units from Puerto Rico was particularly valuable because of their language capabilities. The rotation of

these units in and out, however, was detrimental to the mission because it destroyed continuity. Rather than have active-duty units deployed for the duration, the Reserve Component units arrived and counted the time as their two-week annual training. Several reservists also arrived to do normal weekend reserve duty. While this was laudable, it did little to assist the mission because their time was too short to have any effect.

On April 14, 1980, President Jimmy Carter authorized the immigration of 3500 refugees. Boats began arriving on April 20 in Mariel Harbor to pick up refugees, and the first boat arrived in Key West the following day. When the magnitude of the immigration became apparent, President Carter authorized all refugees fleeing Cuba to be given temporary status. On June 20, the government established the Cuban - Haitian entrant program which gave the same status to Haitian refugees.

Refugees were initially housed in the Miami area to allow contact with families in the area. Some refugees were able to be quickly processed and released to family, but many more could not be immediately placed. As the temporary centers became crowded and the refugees became restive, the government began to relocate the Marielitos to some of the same locations that had been used previously for the Vietnamese refugees: Fort Indiantown Gap, Pennsylvania; Fort Chaffee, Arkansas; Fort McCoy, Wisconsin; Camp Santiago, Puerto Rico. The operation also provided the opportunity for an evaluation of the responsiveness of numerous Reserve Component units and individuals. The thirteen National Guard and three Reserve Military Police units who supplemented the security force during the operation demonstrated a high state of discipline and all the skills necessary to perform a security-type mission. However, it should be noted that the units' support of the Task Force was in lieu of their two weeks annual training. Because of their high state of readiness and their language ability, the three Puerto Rican National Guard Military Police units were especially effective. When disturbances occurred in two different compounds of the camp on August 5, 1980, the staff requested assistance from the 2nd Brigade, 28th Infantry Division, Pennsylvania National Guard, then training at Fort Indiantown Gap. Four battalions of this brigade were assembled from a deployed field location, returned to the cantonment area, and deployed around compounds by nightfall. The responsiveness of the command structure and the discipline of the individual soldier were particularly noteworthy.

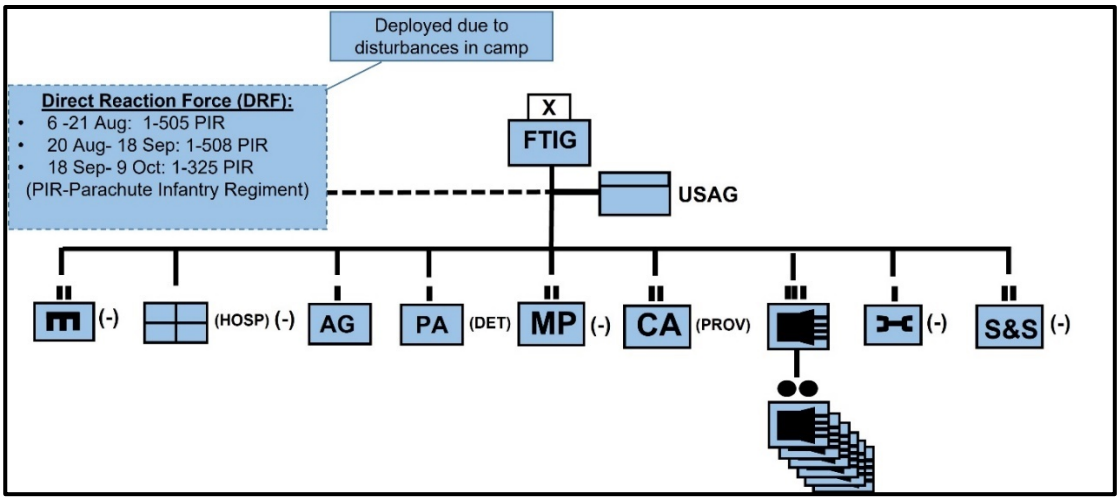

Figure 12- TF Indiantown Gap Task Organization[55]

From May 11-October 15, 1980, Fort Indiantown Gap hosted 19,094 newly arrived Cuban aliens. The mission illustrated major problems in the decision-making process at the higher levels of the federal government. While many problem areas were identified and resolved, four areas plagued the Task Force throughout the operation:

Legal authority of the Federal agencies over the aliens - Fort Indiantown Gap presented special problems because it is located on land leased by the Federal Government and primary law enforcement responsibility for civilians remains with the Commonwealth of Pennsylvania. When local law enforcement agencies and the local prosecutor's offices were faced with the possibility of prosecuting numerous aliens for crimes against each other and confining the guilty in their jails at local taxpayer expense, they refused. Despite the contracting by the federal government for dedicated State Police support and the complete cooperation of the local State Police Troop Commander, no satisfactory system evolved to punish aliens for crimes against each other. Legal restrictions and departmental interpretation of legal restrictions caused a complicated situation as to who had authority and responsibility in a wide range of cases. The system worked because of cooperation and determination on the part of the heads of the local, State and Federal law enforcement agencies. The problem remained unresolved at the departmental level when the Task Force closed and dissolved.[56]

---

[55] Department of the Army, *Task Force Fort Indiantown Gap: After Action Report, Vol. I, 11 May 1980 – 15 Oct 1980* (Washington: Government Printing Office, 1981), 195-202. Hereafter, TF FIG AAR.

[56] TF FIG AAR, vol. II, 1.

Disposition of criminals - When it became obvious criminals and undesirables had been included in the Cuban exodus, efforts were begun to protect the alien population from the crimes of these people. Additionally, considerable effort was expended to prevent the unauthorized departure from the post of all Cubans, but especially to prevent criminal acts by the aliens in the communities surrounding Fort Indiantown Gap. While many Cuban criminals were identified in the initial Immigration and Naturalization Service screening, and those not identified in this fashion began to surface through crimes committed in the camp, no mechanism existed for confining them away from the general population. Normal recourse was a few days' confinement in the small INS detention facility and then release back into the general population. Many of them then committed more crimes and sought revenge on those who had identified them as law breakers. A total of 389 Cubans were sent to Federal Correctional Institutions for various infractions committed here in the States or because of their criminal records in Cuba. More than 100 of those confined were as a direct result of disorders that broke out in the camp, partially caused by the fact that criminals could not be removed from the general population. At the end of the operation, no procedures had been developed to correct this problem. [57]

Disposition of mental cases-- The Cuban population included some people with severe mental illness, and their presence in the population caused serious problems for all who dealt directly with the aliens. The Department of Health and Human Services was responsible for the treatment and care of these mental cases. The mental cases were particularly prominent in disturbances, crimes, and other disruptions to orderly camp routine. Stressful conditions in the camp contributed to the deterioration of the mental and emotional condition of both the severe cases and those with lesser mental problems, Removal of this disruptive element from the Cuban population was a formidable task. While acknowledging that the mental cases were disruptive and a danger to both themselves and the general population, HHS developed no satisfactory solution to the problem. Treatment was conducted on an outpatient basis with the primary objective of keeping the mental cases quiet to prevent them from causing trouble. To the end of the operation, certified mental cases that should have been hospitalized were retained at the camp under inadequate conditions.[58]

Care and control of unaccompanied juveniles (under 18 and not accompanied by an adult family member) -- Unaccompanied juveniles represented about two percent of the camp population but they caused problems out of proportion to their small numbers. For example, they accounted for 40 percent of the off-post crimes known to

---

[57] TF FIG AAR, vol. II, 1.

[58] TF FIG AAR, vol. II, 2.

have been committed by Cuban aliens. Legal restrictions prevented the release of the juveniles to family members other than parents. While this ruling was supposedly in the interest of the juveniles, other actions to solve their problems were not immediately forthcoming. Later in the operation all juveniles were segregated from the general population and an attempt was made to provide better educational and recreational facilities, but the basic problem, inability to obtain their release to sponsors, was not solved at the departmental level until camp consolidation began in late September. Agreements between state government officials and the local federal camp administrator did succeed in freeing some of the juveniles earlier, but juveniles who left camp prior to late September left for confinement in a juvenile correctional institution.[59]

Education and Employment Status

The Cuban refugees, unlike their Vietnamese predecessors, generally came from a much lower socioeconomic status, and fewer of them had usable skills (See Fig.13).

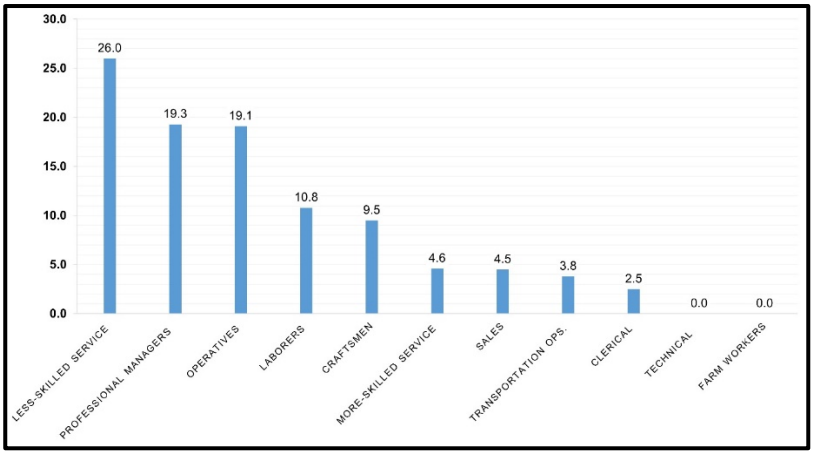

Figure 13- Head of Household Employment Skills- Cuban Refugees[60]

This reduced employment capability is directly related to the overall lower educational attainment of the Cuban Refugee population. See Fig. 14.

---

[59] TF FIG AAR, vol. II, 2.

[60] David Card, "The Impact of the Mariel Boatlift on the Miami Labor Market" *Industrial and Labor Relations Review*, Vol. 43, No. 2 (Jan 1990), 249.

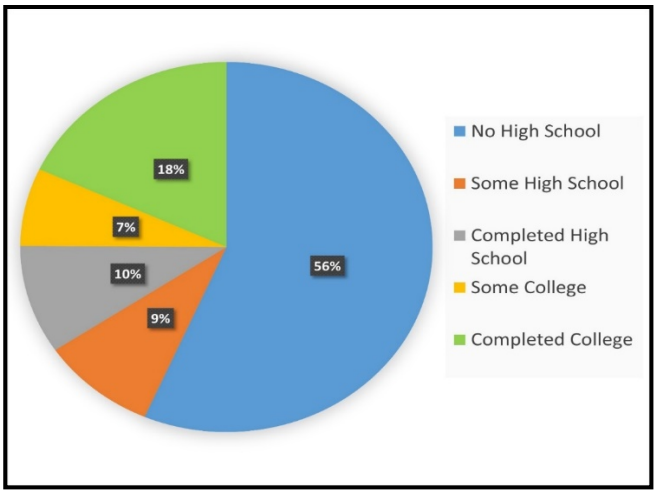

Figure 14-Educational Attainment, Cuban Refugees[61]

Residuals: As the content of the alien population became better known it was obvious that a "residual" composed of individuals who could not or should not be sponsored would remain and require support. Civilian agencies did not immediately recognize the potential for a residual population and did not make provisions for the long-term institutional care (or deportation) of these individuals until camp closings forced the issue. While a small number of the residual had been placed in various institutions by the closing of Fort Indiantown Gap, the bulk was shipped to Fort Chaffee. There remained within the Cuban population a group of people (estimates ranged from 180-1500) who could never be sponsored. [62]

The performance of individual reservists ranged from outstanding to unsatisfactory. For the first two months of the operation, reserve Civil Affairs personnel augmented by reservists from other branches ran the seven alien compounds of the Resettlement Camp. Their performance was more than satisfactory. Individuals whose performance was less than satisfactory were replaced. The most serious drawback to the use of reservists was the necessity for changing area commanders every two weeks. Knowledge of the alien population was lost, and old lessons had to be relearned. This problem was finally solved by using a cadre of Active Army officers and soldiers augmented by reservists.

The Cuban Alien Resettlement Operation should have been a propaganda defeat for the Cuban Government. The fact that it was not was primarily attributable to the focus of the United States news media on the undesirable and disruptive elements placed among the departees by the Cuban Government and the Federal agencies'

---

[61] Card, "Impact of the Mariel Boatlift," 249.

[62] TF FIG AAR, 2.

inability to deal successfully with these disruptive elements. We should closely examine the laws affecting the Immigration and Naturalization Service and other Federal agencies that participated in this operation. Legislation should be introduced which will allow them to deal swiftly and successfully with disruptive elements in future operations of this type.[63]

[63] TF FIG AAR, 3-4.

Annex A. Glossary

AC: Aircraft
ADC: Assistant Division Commander
ADT: Active Duty for Training
AFB: Air Force Base
AG: Adjutant General
AOC: Army Operations Center
ARC: American Red Cross
ARG: (Marine) Amphibious Ready Group
AT: Annual Training
CA: Civil Affairs
CG: Commanding General
CIA: Central Intelligence Agency
CIA: Central Intelligence Agency
CINCPAC: Commander in Chief, Pacific
CONUS: Continental United States
CPO: Civilian Personnel Office
DA: Department of the Army
DAO: Defense Attaché Office
DASD: Deputy Assistant Secretary of Defense
DCSPER: Deputy Chief of Staff for Personnel
DEA: Drug Enforcement Agency
DF: Disposition Form
DFAE: Department of Facilities Engineering
DIO: Directorate of Industrial Operations
DOD: Department of Defense
DOJ: Department of Justice
DOL: Department of Labor
EOC: Emergency Operations Center
EOS: Emergency Operations Staff
ESL: English as a Second Language
ETA: Estimated Time of Arrival
FEMA: Federal Emergency Management Agency
FIG or FTIG: Fort Indiantown Gap
FORSCOM: Army Forces Command
FPS: Federal Protective Service
FRC: Federal Regional Councils
GPO: US Government Printing Office
HEW: Department of Health, Education, and Welfare
HHS: Department of Health and Human Services
HUD: Department of Housing and Urban Development
IATF: Interagency Task Force
ICEM: Intergovernmental Committee for European Migration
INS: Immigration and Naturalization Service

IRS: Internal Revenue Service
JCS: Joint Chiefs of Staff
JRICO: Joint Refugee Information Clearing Office
LPD: Landing Platform Dock (Amphibious Assault Ship)
LPH: Landing Platform Helicopter (Amphibious Assault Ship)
LST: Landing Ship Tank
MACOM: Army Major Command
MACV: Military Assistance Command Vietnam
MAU: Marine Amphibious Unit
MEDEVAC: Medical Evacuation
MILPERCEN: Army Military Personnel Center
MILPO: Military Personnel Office
MOS: Military Occupational Specialty
MP: Military Police
MUTA: Multiple Unit Training Assembly
NEMVAC: Noncombatant Emergency Evacuation
NLT: No Later Than
NSC: National Security Council
NVA: North Vietnamese Army
ODCSOPS: Office of the Deputy Chief of Staff for Operations and Plans
OMB: Office of Management and Budget
OPCON: Operational Control
OPLAN: Operation(s) Plan
ORM: Office of Resolution Management
PACOM: US Pacific Command
PBNCO: Property Book Non-Commissioned Officer
PSU: Provisional Support Unit
RC: Reserve Component
ROTC: Reserve Officers Training Corps
SG: Support Group
SOC: Special Operations Command
SSI: Special Skill Identifier
TDY: Temporary Duty
TFNA: Task Force NEW ARRIVALS
TOE: Tables of Organization and Equipment
UCC: Unified Combatant Command
UNHCR: United Nations High Commissioner for Refugees
USACSG: US Army CINCPAC Support Group (now US Army Pacific)
USAG: US Army Garrison
USAID: US Agency for International Development
USAR: US Army Reserve
USIA: United States Information Agency
VOLAG: Volunteer Agency
WAC: Women’s Army Corps

Annex B. Lessons Learned: Indochinese Refugee Operations, 1975

Interagency Task Force (IATF)

The Director of the Interagency Task Force (IATF), Julia V. Taft, provided a detailed set of lessons learned for the civilian agencies that composed of the IATF. That list is reproduced here, with light editing for clarity.

Organization:

- A Presidential Task Force should be established, directed by a high-level Government official. The Director should be appointed by and report to the President. Agency representatives to the Task Force should be senior officials who will be responsible for coordinating their respective agency's participation. Suggested member agencies should include at a minimum the following:
    - Department of State
    - US Agency for International Development (USAID)
    - United States Information Agency (USIA)
    - Department of Defense (DOD) /Joint Chiefs of Staff (JCS)
    - Department of Health, Education, and Welfare (HEW)
    - Department of Justice (DOJ)
    - Immigration and Naturalization Service (INS)
    - Office of Management and Budget (OMB)
    - Department of Labor (DOL)
    - Department of Housing and Urban Development (HUD)
    - National Security Council (NSC)
    - Intelligence Community
- A mission order (Executive Order) should be issued immediately citing respective roles and memoranda of agreement should be promulgated immediately to flesh out the mission order.
- Task Forces should be temporary in nature, not long-term operations. The Task Force duration should extend as long as interagency resources are required, i.e., for duration of centers.
- One agency (State) should be designated as the Executive Agent to provide management support.
- Task Force Director must have control over all staffing in support of the operations at Headquarters and centers. This can be done either through outside hire, retired annuitants, or reimbursable details. Personnel should be selected and assigned for the duration of the effort, and once assigned, should be released only with the approval of the Task Force Director. A statement regarding staff resources should be included in the Executive Order to ensure top priority.

- Senior White House contacts are required for the NSC and domestic side. Broad policy decisions relating to the refugee program must be coordinated through the Task Force Director.

Legislative Authorization

- Broad legislation should be promulgated to give the Executive Branch permanent authority to implement a refugee program. The Department of State and INS should propose such legislation now. Should a large-scale refugee program subsequently need to be implemented, only appropriations legislation would be required.
- Funds should be appropriated to the President to provide operational flexibility.
- Have early briefings with Congress and have a Congressional liaison office be an immediate component of the Task Force staff.
- Encourage regular reporting to and oversight by Congress.
- Senior center civilian should report to Task Force routinely on Congressional contacts.

International Aspects

- People from the Department of State assigned to the Task Force should go out to key embassies (in countries in which refugees are stranded) to brief mission personnel on the program and their responsibilities.
- Establish early focal point for discussions with other countries. Appoint a "prestige person" to stimulate foreign government interest in aiding refugees.
- Presidential or Secretarial directive should be issued to Chiefs of Mission citing guidelines for refugee disposition and directing them to encourage host governments to accept refugees.
- To the extent they are willing (which was not the case with Indochinese refugees) deal with international VOLAGs in Geneva if we want to internationalize refugee movements.
- Explore with ICEM [Intergovernmental Committee for European Migration] and UNHCR [UN High Commissioner for Refugees] mechanisms whereby international skill banks can be established and used for matching refugees with potential countries of refuge which have skill shortages. ORM/State should initiate discussions now.
- Use ICEM for international movements, of refugees unless crisis evacuation situation exists; then use DOD.
- Work through UNHCR on the issue of repatriation. This problem will be less difficult if staging areas or reception centers are not on US territory.
- Expose future foreign service officers to refugee matters through FSI [Foreign Service Institute] training and management experience.

Media and Public Awareness[64]

- The federal government should not solicit sponsors through its own resources i.e., toll free line, FRCs, as it is not possible for VOLAGs [Volunteer Agencies] to verify such offers quickly. The federal government should not sponsor or resettle refugees without VOLAGs.
- While a national media campaign to solicit sponsors is inadvisable, there must be sufficient information flow to the public regarding who the refugees are and how citizens can help. All offers of sponsorship should be referred to VOLAGs. A toll-free line for information purposes is recommended as well as information packets to be mailed to each interested caller.
- A national advisory committee to provide advice to the President and/or Task Force is not recommended, as the time frame is too short and the pace too quick. A national committee of eminent citizens, however, can reinforce the "national" effort aspects of the program and result in better acceptance. The function, however, should be to serve as an information link to national organizations and interest groups and to serve as a catalyst with those groups to provide services to the refugees. Members should be key representatives from labor, the professions (legal, health, education, etc.), civil rights, industry, who will generate interest and assistance from those sectors. The committee, if established, should report to the Task Force.
- Receptivity on the part of state and local officials is essential. Early information from HEW regarding Federal funding of refugee support systems should be implemented. Governors should be encouraged to establish a state focal point for information and assistance; however, states should not be encouraged to assume direct sponsorship responsibilities if, by doing so, they detract from sponsor-generating efforts of VOLAGs. (In this matter, HEW non-concurs. With adequate technical assistance HEW believes state and local governments not only can mobilize supportive resources, but also can provide a challenge to the traditional VOLAGs. Consideration should be given to modest state grants for governments who wish to establish a coordinating body.)
- Federal Regional Councils (FRC) can provide an excellent vehicle for briefing State and local government officials. FRCs should not be asked to generate sponsorships. They should not provide technical assistance unless personnel are assigned full time to the effort and report frequently to the Task Force. To ensure post-center resettlement coordination, FRCs should assign one person from each key agency to work at the HEW regional office to plan and implement coordinated support systems.

---

[64] ODCSOPS AAR, IV-C-3,4.

- Media and publications services for the centers and Task Force should be contracted from outside Government. The essential factor is speedy information dissemination for which GPO has a less than perfect record. Newspapers and refugee orientation materials should cover at a minimum:
    - News items about the country from which refugees escaped
    - The sponsorship program and VOLAGs
    - Center rules and procedures
    - Cross-cultural awareness
    - Domestic benefits program
    - Orientation to society, i.e., taxes, business practices, schools, job procurement, driving, housing, recreation, health hygiene, and geography

Resettlement Agencies[65]

- If possible, to keep refugee program internationalized, work with international resettlement agencies.
- Make VOLAGs part of the team immediately. This could be done through regular meetings, a representative on the Task Force and/or on the staff, or a combination of both.
- The Task Force should provide administrative and executive officers to each VOLAG at each center for data and file management.
- If there is special VOLAG funding, ensure VOLAGs not duplicate existing support systems. Special aides needed in medical care, job training and placement, E.S.L.
- VOLAGs should be assigned quotas based on capability. Criteria minimal for sponsorship (and Verification) should be spelled out in contract with minimum specified duration of sponsorship responsibility.
- If Federal funds are given to VOLAGs to be passed on directly to refugees, a standard level of cash per refugee should be adopted and so stipulated in the contracts and in Congressional budget justifications.
- Call VOLAGs "resettlement agencies."
- VOLAG contracts should stipulate resettlement of people from centers; if there are “pick-ups" they should be covered by separate contract with the agencies. Also, the policy and procedures covering "pick-ups" should be developed and promulgated to give the widest publicity possible.
- Be selective (if possible) on which resettlement agencies should participate.
- Centers should monitor and control registration process from central distribution point.

Center Operations[66]

---

[65] ODCSOPS AAR, IV-C-4,5.

[66] ODCSOPS AAR, IV-C-5,6.

- Each reception center completed after action reports outlining procedures and problems associated with center management. These are on file with ORM/Department of State, National Archives, HEW, and the former Director, IATF.
- Some key points include:
    - Use the military for logistical support if rapid mobilization is essential. If overseas long-term staging centers are used and a processing center (not hastily developed) is envisioned for stateside logistical support can be contracted out.
    - A table of organization is essential.
- There must be a clear delineation of roles between civilians and military at the centers. The Director, IATF Headquarters, must be the final decision authority, should a conflict of roles arise.
- Specific guidance should be issued to civilians and military on key areas such as:
    - Physical layout of center
    - Public affairs
    - Repatriation
    - Comptroller functions
    - Intelligence
    - Unaccompanied children
    - Abortions
    - Movement to third countries
    - VOLAG management
    - Personnel hiring
    - Use of refugees as volunteers
    - Admission to center of volunteers, researchers, etc.
    - Law enforcement
    - Consular forms
    - Computer operations
- Center management structures will depend on the type of military reservation used. Therefore, there should be definitive guidelines spelling out civilian/military responsibilities in each of the above areas.
- Counseling services are essential at the centers. An effective technique is to use refugees themselves who have a professional talent for evaluation, social work and/or counseling - perhaps former US government local National employees. Counseling should be provided for sponsorship assistance, family problems, orientation to new culture, explaining the resettlement process, etc.
- Qualified management and controller type civilian personnel should be assigned to each center, and the center coordinators should be given full responsibility for the financial management of their operations. This should be done by giving

each coordinator operating allowances or other financial guidelines as well as accountability for inventories, operational records, etc. These personnel should remain with the task force or the residual headquarters activity until all claims, disposition of resources, and other management aspects of the program are finalized.

- Complete records of refugees and Center should be kept. No refugees should be released from the centers until they have been assigned social security account numbers, alien registration numbers, and I-94 forms. Note: This would relieve us of the problems we now have of trying to clear up the status of the several thousand refugees who reportedly left centers without proper identification.
- Short-term but intensive "survival English" should be required for all adults if the expected center stay will exceed 30 days. It is not advised that vocational training be offered; however, job counseling is important, and each sponsor should consider employment for the refugee as the critical feature of resettlement.

Budget Preparations: In building a total budget, the following factors should be considered:[67]

- The principle that the refugee influx should have no cost impact on the states. HEW should budget for 100% reimbursement for welfare, social services, and incremental educational costs. Separate medical coverage is advisable. The use of Medicaid poses problems because of varying State standards. Also, once refugees get Medicaid, they are thrust into the midst of the welfare programs which encourage dependency.
- Estimated stay in centers should realistically reflect the capacity of the federal and voluntary agencies to gear up. IATF experience showed an average center stay of 100 days.
- Multiple centers are preferable to one large center although cost factors do rise with multiple sites.
- Military airlifts are more expensive than Intergovernmental Committee for European Migration (ICEM) charters.
- All senior members of the task force should be involved in the development of budget estimates with assistance from OMB [Office of Management and Budget]. Reimbursement guidelines should be developed in writing as soon as possible with fund citations for each appropriate agency.

---

[67] ODCSOPS AAR, IV-C-7,8.

- Stringent post-center reporting requirements should be made a part of each resettlement contract.
- A special effort should be made to include in the appropriation authorization to hire refugees to assist in the various areas of the program, especially those who are from former employees of the US government overseas. IATF experience showed former Vietnamese employees to be valuable assets to the program and they were victimized to the extent that they were hired on contract or rather temporary appointment and did not receive any retirement credit for this service.

Federal Agency Roles

The collection of federal agencies involved in operation new arrivals performed a variety of necessary missions. This organization and donation of responsibilities made the mission successful. The Cuban refugee mission in 1980 lacked much of this organization (See Table 1).

Table 1- Federal Agency Roles

Department of State[68]

- Serve as the “institutional memory" and to develop standard operating procedures and contingency plans.
- Get standby authority for greater fiscal flexibility, Executive Agent support - i.e., space, communications. linguists, personnel and contracting system, filing, and contracted data processing.

Immigration and Naturalization Service[69]

- Coordinate the nine agency computerized security clearances (DEA, FBI, CIA, DOD, State, INS).
- Determine admissibility to the US.
- Issue “A” numbers to all refugees; fingerprint and photograph.
- Authorize employment.
- Get affidavits (re: "never persecuting others”) and the assets and liabilities certificates.
- Issue refugee travel documents.
- Adjust status.
- Great concern has been expressed about the term "parolee" and its negative connotations. INS should consider revising the terminology to describe the refugee status.

Department of Justice[70]

- Provide legal counsel at headquarters and centers.
- Seek parole authority if it is beyond current statutory authority.
- Provide US Marshals for law enforcement beyond what DOD would provide.
- Establish protocol between DOD and Justice regarding law enforcement jurisdiction at centers.
- Delineate respective responsibilities for each center.
- Provide legal advice to refugees re: legal issues impeding their ability to leave centers but not general legal advice.

Department of Defense

- Only Federal agency capable of mass refugee movement and maintenance quickly.
- Should be tasked to perform evacuation mobilization.
- Center maintenance and setting up of logistical support should be done by DOD if time is critical.

---

[68] ODCSOPS AAR, IV-C-8.

[69] ODCSOPS AAR, IV-C-9.

[70] ODCSOPS AAR, IV-C-8.

Department of Health, Education, and Welfare

- Headquarters, Department of Health, Education, and Welfare. Constant role in post-resettlement conceptualization, orientation and VOLAG contract negotiation and liaison. Develop SRS guidelines. Budget development.
- Public Health Service. Provide immunizations and disease surveillance at centers and with VOLAGS to make sponsors aware of Class I and II diseases. Be sure each refugee has a personal copy of health records upon release.
- Social and Rehabilitative Services. Handle problems of destitute repatriated Americans. Assist center and VOLAGs on special placement problems, i.e., unaccompanied children, physically or mentally handicapped.
- Social Security Administration. Issue Social Security cards using block numbers.[71]

National Security Council[72]

- Use as a lever to assign DOD specific logistical support tasks. Each assignment should be in writing.
- Serve as White House “foreign affairs” point of contact.

Department of Treasury[73]

- Foreign Currency Exchange
- IRS responsibilities and benefits to refugees and sponsors
- Foreign Assets Controls

Department of Labor [74]

- Provide job coding for each refugee. Analyze labor market needs and assist VOLAGs at centers.
- Ensure participation in budget preparation for refugee skill training and employment during post center resettlement.

Department of Housing and Urban Development[75]

- Handle problems related to housing shortages and provided advice to VOLAGs on available housing programs for refugees.

Office of Management and Budget[76]

- Secure formal details from Federal agencies to work on Task Force. Assist in budget and legislative preparations. Serve as White House "domestic affairs" point of contact.
- Key link to get Federal Regional Councils involved as information conduits with State and local governments.

---

[71] ODCSOPS AAR, IV-C-8-9.

[72] ODCSOPS AAR, IV-C-10.

[73] ODCSOPS AAR, IV-C-10.

[74] ODCSOPS AAR, IV-C-10.

[75] ODCSOPS AAR, IV-C-10.

[76] ODCSOPS AAR, IV-C-9.

Intelligence Community[77]

- Assist in security clearance processes.
- Provide information prior to and during evacuation if there is a US evacuation.

US Agency for International Development (USAID) [78]

- Assist in preparation of initial budget, provide language and area specialists.

Department of Transportation[79]

- Assist in coordinating air transit services from center to final destinations.

United States Information Agency (USIA) [80]

- Staff public information offices, provide linguists and personnel who are specialists in cross-cultural communication.

	Department of Interior[81] • If staging areas are in Pacific territories, Interior can provide on-site support and coordination. Otherwise, minimal involvement.

[77] ODCSOPS AAR, IV-C-10. In 1975, the Intelligence Community consisted of eight military and civilian agencies led by the Director of the CIA as the Director of Central Intelligence. The Intelligence Reform and Terrorism Prevention Act of 2004 created the Office of the Director of National Intelligence (ODNI) which now leads a community of 17 agencies.

[78] ODCSOPS AAR, IV-C-8. The USAID was created by the Foreign Assistance Act (September 4, 1961), to administer foreign aid and disaster assistance. It is an independent government agency that operates with State Department guidance. The USAID Administrator also sits on the National Security Council.

[79] ODCSOPS AAR, IV-C-10.

[80] ODCSOPS AAR, IV-C-8. The USIA was an independent agency for public diplomacy that reported directly to the President through the National Security Council. Among other things, the USIA supervised the Voice of America (VOA) and administered the Fulbright Grant program. The Foreign Affairs Reform and Restructuring Act of 1998 abolished the USIA and transferred it responsibilities to the Under Secretary of State for Public Diplomacy and Public Affairs. *The United States Information Agency A Commemoration,* 1999.

[81] ODCSOPS AAR, IV-C-10.

Department of the Army

Significant Issues Summary

The Office of the Deputy Chief of Staff for Operations, US Army, produced a detailed After Action Report at the end of the mission. That After Action Report is reproduced here, with light editing for clarity and brevity.

Organization

- A national level organization must be established at the outset of a refugee program to coordinate relations and activities among all involved civilian and military agencies of the US Government.
- Coordination among civilian and military task force elements, local government officials, civic and business leaders and with the news media should be achieved to facilitate productive public relations at refugee reception center level.
- Refugee programs require the assignment of full-time Department of State, Department of Homeland Security, and other Federal agency representatives. Although the military departments may be tasked with reception center management and support, the civilian agencies which ultimately must make all policy decisions that affect the refugees. On-site civilian liaison officers are indispensable in obtaining and disseminating guidance from US Government agencies.[82]

Refugee Welfare

- It is essential that current data on the culture and the customs of the refugees be available for program planning and the orientation of US personnel.
- Appropriate language instruction and an orientation on life in the United States should be commenced as soon as possible for all refugees.
- Extensive recreational programs are important since they form an integral part of reception center activities.[83]

Refugee Health Care

- Vector control, a necessity when there is an influx of large numbers of refugees, and the requirement for the commitment of military entomologists

[82] ODCSOPS AAR, IV-A-1.

[83] ODCSOPS AAR, IV-A-2.

prior to the arrival of refugees are crucial to control and minimize potential health hazards.

- Procedures for medical screening and determining the disposition of ill and injured refugees prior to their arrival in the United States should be established.
- Establishment during early processing of a system of priority for onward movement of infants, pregnant women, the aged, and other high medical risk refugees should be compulsory.
- Early identification of immunization requirements is critical to preclude the possibility of serious diseases or epidemics.
- Medical specialties should be provided based on age distribution of the refugees. A large proportion of the Vietnamese and Cambodian refugees were children, which resulted in the requirement for more pediatricians and general medical officers than were available.[84]

Refugee Legal Status

- Both Federal and local jurisdiction over refugees must be determined and appropriate guidance issued prior to their arrival.
- The immigration status of the refugees should be ascertained by the Department of Justice (Immigration and Naturalization Service) and disseminated to all agencies as soon as possible.[85]

Military Personnel

- Every effort should be made to arrange for contract services in lieu of utilizing military personnel to support mess operations and refuse collection.
- When the military cannot meet the requirements for qualified linguists those services should be contracted immediately.
- Use of qualified volunteer Reserve component personnel is encouraged once the refugee centers are in operation and operating procedures are established.[86]

---

[84] ODCSOPS AAR, IV-A-2.

[85] ODCSOPS AAR, IV-A-31.

[86] ODCSOPS AAR, IV-A-3.

Facilities

- The impact of proposed refugee reception facilities on the environment should be promptly and fully evaluated.[87]
- Assessment of the condition of installation facilities should be rapidly completed in order that repairs and renovations can be made by the military and/or civilian contractors.
- A procurement team should be assigned to each refugee reception center with sole responsibility for responding on procurement matters related to the refugee operation.[88]

[87] ODCSOPS AAR, IV-A-3.

[88] ODCSOPS AAR, IV-A-4.

Issues and Recommendations

The issues and recommendations reflect the combined recommendations from HQDA, FORSCOM and Task Force New Arrivals at both Fort Chaffee and Fort Indiantown Gap. They are combined where necessary and edited lately for clarity.

Command and Control

Department of the Army Staff Coordination

Discussion: Army Staff activity for the Indochinese refugee program was managed and coordinated by ODCSOPS. A response cell under the direction of the Director of Operations, ODCSOPS, was formed in the Army Operations Center (AOC) at the outset of the operation with ODCSLOG establishing a supporting Logistics Operations Center in the AOC.

Recommendation: The response cell proved to be an effective crisis management tool and a similar concept should be employed in all future operations when rapid, coordinated staff responses are required.[89] **(HQDA)**

Tasking Authority

Discussion. At the outset of the operation FORSCOM was given the mission of providing/coordinating all CONUS support for the resettlement centers. DA authorized FORSCOM to task other MACOMs for personnel support. Support from MACOMs in other areas was provided either by mutual coordination or through DA tasking. This caused confusion and/or delay in response.

Recommendation. Authority to task other MACOMS should be clearly defined and announced to all concerned. If such authority is granted, it should cover all areas of support, and DA should only intervene to resolve problems.[90] **(FORSCOM**)

Cross-MACOM Coordination

Discussion. Although the actual military refugee support at Fort Chaffee was organized as a task force, Fort Chaffee's status as a sub-installation of Fort Sill (a TRADOC post) interposed an additional layer in the command structure.

Recommendation. Should one MACOM have a mission that requires the use of another MACOM's installation, the first should be given operational control of the installation to ensure a singleness of purpose and immediate response to mission requirements.[91] **(FORSCOM**)

---

[89] ODCSOPS AAR, IV-B-2.

[90] Headquarters, US Army Forces Command, Operation NEW ARRIVALS After Action Report (Interim) (Ft McPherson, GA: FORSCOM, 1976?), Tab S, (Lessons Learned), S-1. Hereafter, FORSCOM AAR.

[91] FORSCOM AAR, S-1.

Staff Organization

Discussion. To start the operation, the [Emergency Operations Staff] EOS was activated. Once it was well underway, a mini staff was formed to coordinate staff activity to support it.

Recommendation. The mini-staff concept provides an efficient basis for continued operations without sacrificing centralized control. **(FORSCOM**)

Uniform Administration.

Discussion. Each of the resettlement centers devised its own processing procedure and administrative forms. This caused some problems in inter-camp transfers.

Recommendation. Basic processing requirements and forms should be standardized to facilitate inter-camp activities.[92] **(FORSCOM**)

Aircraft Scheduling.

Discussion. It appeared that there was no central scheduling authority for facilities refugee inflow. This caused overloading of processing followed by lack of activity.

Recommendation. A central scheduling authority is required to provide an even flow of aircraft.[93] **(FORSCOM**)

Organizational Confusion

Discussion: Once the troop list for a refugee support operation has been completed, the Task Force must publish a task organization without delay. This task organization should specify the responsibilities of intermediate command and control elements and provide an effective chain of command and notification.

Recommendation: Units and detachments should be functionally organized to facilitate operations. A composite support battalion headquarters should be formed to provide command and control of units and detachments that cannot be functionally assigned to other headquarters elements, i.e., MP, Medical, Engineer.[94] **(TFNA)**

****

Operations

Mission

Discussion. The original mission assigned to the Army at the resettlement centers was to support the IATF logistically and provide billeting, messing, security,

---

[92] FORSCOM AAR, S-5.

[93] FORSCOM AAR, S-5.

[94] Headquarters, 46th Support Group (CORPS), *After Action Report: Operation NEW ARRIVALS — Fort Chaffee*, Annex H, May 19, 1975.

health and comfort services for the refugees. As the operation unfolded, military task force commanders found themselves involved in the gene-al processing and administration of the refugees themselves because the federal agencies could not respond to all the requirements.

Recommendation. The military, by its very nature, possesses the assets and flexibility to respond to the requirements of this sort of operation. Military commanders must expect and be prepared to assume responsibility for diverse non-military actions which cannot be accomplished by the federal civilian agencies. **(FORSCOM**)

Support of Summer Training

Discussion. The annual support requirement for RC summer training. In particular, the number of cooks required to feed the refugees added to the number committed to RC and ROTC Summer Camps degraded the ability of installations to feed their troops. When the Discussion became untenable, the food service support for the refugees was contracted to private industry.

Recommendation: Although the urgency to start an operation dictated the use of military mess personnel, initial planning should include the conversion of the food service effort to contract status as soon as possible.[95] **(FORSCOM**)

No OPLAN for Refugee Operations

Discussion: A refugee support Contingency OPLAN should be produced and maintained to minimize the possibility of initial confusion and to properly delegate effort and errors if an operation of this sort becomes necessary in the future.

Recommendation: As a minimum, such an OPLAN should include a troop list that would anticipate Task Force personnel and equipment requirements and a task organization. Equally important, the OPLAN should include a checklist of actions to be taken during the initial phases of the operation. Finally, the OPLAN should include supply and services requirements for the daily support of a refugee population. This should be organized so that it can be applied; to different population levels.[96] **(TFNA)**

Delay in Orders

Discussion: FORSCOM execution of troop deployment orders was delayed due to certain problems which had emerged at the national level. The selection of military installations as refugee reception centers was a sensitive political issue which required coordination with the Congressional delegations representing those States concerned. However, by late afternoon on April 29, the difficulties had been resolved and, at 1624 hours EDT the same day, Commander, FORSCOM, was given the oral order to execute OPLAN NEW ARRIVALS for Fort Chaffee and to be prepared to receive the first refugees NLT 0900 hours CDT on May 2. This decision was issued in a JCS message, and the order was confirmed by a message from the Department of the Army

---

[95] FORSCOM AAR, S-4.

[96] 46th SG AAR.

while the Department of State released a message outlining interagency relationships to be established at Fort Chaffee.

Recommendation: Streamline and accelerate the warning and execution order process.[97] **(TFNA)**

*****

Civilian Agency Responsibility

Delineation of Roles

Discussion: Delineation of the official role of each senior civil coordinator and the scope of his authority was not announced in the early stages of the operation which caused some confusion in civilian and military chains of command over approval for projects.

Recommendation: Upon activation of a joint civilian and military task force, areas of responsibility and authority should be immediately ascertained and delineated for the benefit of all officials concerned.[98] **(HQDA)**

Continuity of civilian task force staffing

Discussion: The practice of civilian agencies which rotated key personnel on a thirty-day basis caused disruptions in directing the program activities. This lack of continuity was offset by the military in some instances but did not totally compensate for the problem.

Recommendation: Civilian agencies must determine personnel requirements for the duration and recognize the value of continuity in such operations. The military must be prepared to sustain an activity during the transition of agency directors, or the activity will falter. [99] **(HQDA/FORSCOM)**

Senior Civil Coordinator's Authority

Discussion. Official delineation of the senior civilian coordinator's scope of authority was not announced, causing some confusion on approval levels for projects.

Recommendation. Upon activating the task force the scope of authority must be ascertained and promulgated to all involved.[100] **(FORSCOM**)

Central Coordination.

Discussion. During the initial phase of a joint military/civilian refugee support operation the military element will likely be initially responsible for all activities related to the operation until the civilian elements are able to become operational. In several

---

[97] ODCSOPS AAR, I-B-11.

[98] ODCSOPS AAR, IV-B-1.

[99] ODCSOPS AAR, IV-B-2; FORSCOM AAR, S-5.

[100] FORSCOM AAR, S-6.

instances, military commanders negotiated with non-DOD agencies (e.g., USPS, USPHS, DOL) on matters of support for, or use of, the refugees even though the IATF had overall responsibility for the operation.

Recommendation. Negotiations for services or support from non—DOD agencies should be the responsibility of the agency with overall responsibility for the operation. As soon as possible, coordination must be made with the civil coordinator and the civilian agencies to define respective responsibilities within the joint headquarters and to establish an effective working relationship. Although duplication of effort should be avoided in a joint operation of this sort, the military and civilian elements should maintain separate staffs and chains of control.[101] **(FORSCOM/TFNA**)

****

Refugee Welfare

Self-Help Work

Discussion: DA guidance permitted refugees to perform self-help type work at the reception centers on a voluntary basis "in order to ameliorate their situation, maintain conditions essential to their health, safety, and morale, or related tasks considered essential for their well-being." However, attention had to be given to the manner and conditions under which refugees were utilized to comply with Federal labor standards, contractual agreements for services, etc.

Recommendation: Prior to engaging refugees in volunteer efforts, ensure that all work projects meet safety and working-condition requirements; receive labor standard exceptions from Department of Labor if necessary; preclude unauthorized use of refugees by contractors; fall under proper supervision; and maintain public relations images which accurately reflect the purpose and scope of the work to the local community.[102] **(HQDA)**

Population control and collection of demographic data

Discussion: Throughout the Indochinese refugee program, several methods for ascertaining statistical information and other data on the refugees was used. Simultaneous arrivals and departures of refugees from staging areas and centers kept population figures in a constant state of flux thereby hampering the development of an accurate program census. Complicating the problem were the periodic reports submitted by many of the agencies - both civilian and military – that utilized various formats and were compiled for differing purposes. Each of the various agencies within the resettlement maintained their own population count. Both the IATF and the military submitted daily SITREPS which included the current population figure. At no time did

---

[101] FORSCOM AAR, S-4; 46th SG AAR.

[102] ODCSOPS AAR, IV-B-5.

any two sets of figures agree. This caused repeated, unnecessary attempts to reconcile figures of fleeting validity.

Recommendation: That a single agency, military or civilian, collect and disseminate refugee population and other data for use by all agencies in planning operations and resettlement efforts. Only one census figure should be used for reports. It should be that figure determined by the agency with overall responsibility for the operation.[103] **(HQDA/FORSCOM)**

Concessions for conversion of valuables

Discussion: Circumstances made it necessary to provide the refugees with facilities where gold could be converted to US currency. Guidance was not immediately available on this matter and considerable effort was expended formulating concession agreements for approving gold exchange operations on military installations.

Recommendation: Those future operations provide specific guidance to installation commanders on conversion of valuables to US currency by refugees evacuated into the country.[104] **(HQDA)**

*****

Refugee Legal Issues

Military Police Authority

Discussion: The limitations of Military Police authority and jurisdiction over the refugees were never clearly established. Although the US Marshals Service had complete authority and jurisdiction over refugees, they were seldom present to exercise it because of other requirements. This void hampered the execution of routine Military Police duties. Indeed, the lack of clear-cut authority and jurisdiction was significant in that it could have been exploited by restive refugees or those seeking repatriation.

Recommendation: Authority and jurisdiction over refugee personnel must be clearly defined and thoroughly coordinated with all involved military and civilian agencies prior to the arrival of the refugees. A permanent contingent of the US Marshals should be assigned to the refugee reception center throughout its operation.[105] **(HQDA)**

*****

[103] ODCSOPS AAR, IV-B-1; FORSCOM AAR, S-5.

[104] ODCSOPS AAR, IV-B-4.

[105] ODCSOPS AAR, IV-B-3.

Military Personnel

Qualified civil/military affairs personnel for internal control

Discussion: The shortage of trained civil/military affairs specialists developed as reception center population ceilings were increased and the average stay of refugees lengthened. The limited pool of active Army assets made the use of Reserve Component personnel essential in this area. Entire Reserve units could not be activated because of the lack of a declared emergency; therefore, individual Reservists who volunteered for Active Duty for Training (ADT) were assigned to Forts Chaffee and Indiantown Gap on a selected basis.

Recommendation: That authorization for the call—up of selected Reservists be considered to support humanitarian operations with requisite civil/military affairs specialties.[106] **(HQDA)**

Enlistment Options.

Discussion. Enlistment contract guarantees for Unit or Station of Choice stabilization degrade the Army's ability to meet immediate major commitments without a declaration of national emergency. To fulfill the requirements for specific skills to man refugee reception, it was necessary to deploy personnel with guarantees. To avoid breach of contracts which would have resulted in losses to the Army, HQDA took action to adjust periods of stabilization to allow use of these personnel. This, however, was not done until well into the first thirty days of the program and resulted in general confusion at unit level as to the status of Statement of Choice/Unit of Choice (SOC/UOC) personnel.

Recommendation. At the first instance of deployment of personnel with contractual guarantees, DA must be queried on adjustments to preclude breach of contract problems.[107] **(FORSCOM**)

Women's Army Corps (WACs)

Discussion. After deployment, commanders discovered that a significant number of WACs were pregnant. This caused a great deal of medical concern since their duties called for dealing with the refugees and consequent exposure to a broad range of diseases not normally encountered. As a result, these women had to be replaced at additional cost to the government.

Recommendation. Pregnant female personnel should not be deployed to support humanitarian operations which will bring them in contact with contagious diseases.[108] **(FORSCOM**)

---

[106] ODCSOPS AAR, IV-B-4.

[107] FORSCOM AAR, S-2.

[108] FORSCOM AAR, S-3. The Women's Army Corps (WAC) was created in 1943 to allow women to serve. Regulations from 1951 to 1971 required WACs to be automatically discharged if they became pregnant. The regulations changed in 1971 to allow pregnant women to obtain a waiver to the

Qualified linguists for refugee operation support

Discussion: Large numbers of Army linguists were required to support the operation. A large percentage of personnel identified as linguists in military records did not have the required proficiency. Since Federal law precluded the hire of refugees to function as interpreters, the problem was resolved by drawing on the world-wide assets of the Army to fill some of the requirements. With the number of linguists needed at the centers below strength, delays in processing were experienced. Although MILPERCEN rosters reflected enough qualified personnel, the majority were found to be non-proficient after deployment. Various means were used to develop other sources. Federal law prohibits the hire of the refugees for this purpose. State Department resources were not sufficient for its own needs. Some success was achieved in soliciting volunteer military who, though not listed as such in official records were bilingual because of family structure.

Recommendation: Records of Army linguists should be reviewed to determine that proficiency ratings of all linguists listed are correct. Additionally, Federal hire of aliens should be authorized in emergency situations such as refugee operations. Initial screening at the home installation is required to identify basic proficiency. Action to identify volunteer linguists should be initiated as soon as possible.[109] **(HQDA/FORSCOM)**

Reserve Augmentation.

Discussion. Active Component shortage of civil affairs units made the use of volunteer reserve personnel necessary to man both resettlement centers. To accomplish this DCSOPS initiated a program to identify requirements and volunteer personnel to fill them. Later, DCSPER— RC assumed the operational aspect. At that point, the Surgeon began identifying requirements for individual augmentees in specialties not available in the Active Component. The urgency of some of the requirements and the split responsibility for identifying reservists caused some problems in administering the program.

Recommendation. The identification and administration of RC assets should be managed by DCSPER from the outset to ensure efficient and timely management of resources.[110] **(FORSCOM**)

****

Facility Management

---

automatic discharge, but the services were given until 1975 to develop the procedures. The Army was making this transition during Operation NEW ARRIVALS. The WAC was disbanded in 1978 and all female soldiers were integrated into the Regular Army.

[109] ODCSOPS AAR, IV-B-4; FORSCOM AAR, S-3.

[110] FORSCOM AAR, S-3.

Natural resources at installations supporting refugee operations

Discussion: In the preparation of a selected Army installation for winterization, a review of requirements indicated that the existing contract for delivery of natural gas to the heating system was sufficient. However, the utility company informed the Army that it would be unable to supply the amount specified in the contract without interrupting service to industrial customers. Although the contract called for an uninterrupted supply of gas up to the required amount, the gas company initially refused to honor the terms of the contract.

Recommendation: That review of contracts for the continuance of essential services and resources be considered as part of the installation nomination process; that seasonal requirements for natural resources and their availability be considered as one of the determining factors for installation selection; and that judicial injunction be pursued to preclude discontinuation or degradation of service during renegotiation of contracts.[111] **(HQDA)**

Planning for winter operation of reception centers

Discussion: The original concept of a short-term operation became obsolete once the magnitude of the refugee population became apparent. However, IATF planning for winter operations, once the duration of the program was determined, did not begin until sometime later. This delay affected several decisions that should have been made earlier. The original concept of the refugee operation called for a short-term requirement to house and support 20,000 refugees. Consequently, little evaluation of the cold weather capabilities or natural resource requirements was done.

Recommendation: National level authorities must be advised that timely decisions are essential in planning the continuation of such ongoing actions. Plans must be formulated and approved as soon as changes in the situation become apparent. The impact of possible extended operations should be included as a factor in installation selection. If the installation is a semi-active one, existing contracts for the delivery of natural resources must be evaluated to determine their current validity.[112] **(HQDA/FORSCOM)**

Accountability of US Government property

Discussion: Many of the refugees departed the centers without turning in the personal documentation, bedding, blankets, and other materials.

Recommendation: Proper clearance procedures must be established and enforced to prevent the loss of government property and to insure the accountability of all departing individuals.[113] **(HQDA)**

---

[111] ODCSOPS AAR, IV-B-6.

[112] ODCSOPS AAR, IV-B-6; FORSCOM AAR, S-1.

[113] ODCSOPS AAR, IV-B-7.

Installation Support

Discussion: During the initial and preparation phases of a refugee support operation it is essential that the Task Force staff be able to coordinate directly with the local garrison for supply and service support requirements. If the garrison staff is not capable of providing full local support, supporting installations should be close enough to preclude delay in receiving support.

Recommendation: When evaluating semi-active installations for possible utilization in a refugee support operation, consideration must be given to the capability of the local garrison to support the Task Force during the initial phases and the proximity of other installations capable of providing support.[114] **(TFNA)**

*****

Local Response

Discussion: In commencing the operation of refugee reception centers, the Army experienced initial resistance from state and local political leaders who expressed concern over the impact of Operation NEW ARRIVALS on their communities. Although Congressional delegations had been briefed, the information had not filtered down to local level. To alleviate existing and potential misunderstanding and apprehension, Task Force NEW ARRIVALS personnel met with civic leaders and businessmen to explain the political, social, and economic ramifications of Operation NEW ARRIVALS. This flow of accurate information from knowledgeable official sources resulted in a general abatement of undue anxiety over the presence of refugee reception centers.

Recommendation: That in future operations, affecting any civilian community, appropriate public affairs emphasis be placed on the concerns of local leaders and groups in a timely manner which coincides with the pace of refugee planning and operations and those representatives of the news media be included in the coordination process as early as possible.[115] **(HQDA)**

*****

Mission Termination

Termination of reception center operations

Discussion: Planning for the closure of the refugee reception centers was not begun until late in the operation. Furthermore, the rotation of civilian personnel by Federal agencies resulted in conflicting views on requirements and responsibilities for

---

[114] 46th SG AAR.

[115] ODCSOPS AAR, IV-B-2.

the termination phase of the operation. This caused delay in the approval and the execution of restoration and termination projects.

Recommendation:

Planning for the termination of operations should be initiated as soon as possible. Termination contingency plans should include basic guidelines on the scope of actions, agency responsibilities, and the type of projects authorized. These contingency plans should be coordinated with and approved by the agency charged with overall responsibility for the operation.[116] **(HQD/FORSCOM)**

Planning - Extended Operations.

Discussion. The original concept of a short-term operation became obsolete once the magnitude of the refugee population became known in May but planning for operation into the winter months did not begin until July. By that time, action has already overdue to prepare the centers for cold weather, so normally available procedures (e.g., requests for bids to supply winter clothing) could not be used. This delay resulted in greater expenditures than might have been encountered.

Recommendation. Timeliness is essential in planning the continuation of an on-going action. Plans must be formulated and approved as soon as requirements change. Delay results in increased costs.[117] **(FORSCOM**)

---

[116] ODCSOPS AAR, IV-B-7; FORSCOM AAR, S-4.

[117] FORSCOM AAR, S-2.

Annex C. Lessons Learned: Cuban Refugees, 1980

The Cuban refugee resettlement process was much less organized than Operation NEW ARRIVALS. Unlike the earlier mission, planning for Cuban refugees did not include deploying support units to establish the refugee centers. The garrison staff at Fort Indiantown Gap was assigned as the Task Force Headquarters, and it used a combination of Pennsylvania National Guard units already in training, some mobilized Reserve component units, and the civilian garrison staff. The lessons learned provided below come from the after-action report that Task Force Fort Indiantown Gap produced after the conclusion of the mission. It has been lightly edited for clarity.

*****

Command and Control

Task Force Preparation

Discussion: The TF Commander, USAG staff and Federal agencies had insufficient time to adequately prepare and plan the conduct of this operation.

Recommendation: That decisions be made as early as possible concerning selection of installations and units to support contingency operations. [118]

EOC Staffing

Discussion: Due to the reduction of the alien population and the subsequent reduction of EOC personnel, the EOC was not sufficiently staffed to manage the disturbance on Aug 5, 1980. More liaison personnel and/or radios were required to monitor operations due to the increased activity of the EOC.

Recommendation: During any type of disturbance/increased activity, the MPs should be tasked to provide one liaison person with radio to keep the EOC informed of MP operations and manage related queries. The CA/PSU should provide a radio for monitoring their net. Also, if TF security personnel increase due to activation of NG or deployment of reaction forces due to a disturbance, liaison personnel should be placed in the EOC.[119]

Updating the EOC

Discussion: The EOC was not kept informed of all activities, visits, and scheduled events. However, the EOC did receive questions concerning various activities, and only after investigation could answer them. One focal point for all operations should be implemented and enforced. This would allow for proper dissemination of information and a smoother overall operation.

---

[118] TF FIG AAR, 5.

[119] TF FIG AAR, 31.

Recommendation: The EOC, at the onset of a mission of this type, should be the operations center. All staff sections and civilian organizations should be made aware of this so that effective coordination can be made.[120]

*****

Operations

Out-processing Delays

Discussion: Due to an effort to maximize out-processing, approximately 144 aliens were held in the out-processing area over ten days and some as much as three weeks or more. Aliens should not have been brought into out-processing holding area unless they were ready to be released within 24 hours. Morale problems were created as those who arrived subsequently were being released promptly around-the-clock.

Recommendation: Do not jump the gun to maximize out-processing. It is imperative that the Department of State ascertain the exact status of aliens before bringing them into the out-processing holding area and have transportation available/booked to move the aliens out.[121]

*****

Civilian Agency Responsibility

Lack of VOLAG Training

Discussion: VOLAGs caused confusion regarding out-processing procedures and gave estimates on number of days an alien would remain in camp until sponsored. Untrained/uncoordinated VOLAG activities caused loss of credibility in the processing center operation.

Recommendation: VOLAG employees should go through an orientation process, run by the TF or coordinating agency (FEMA/State Dept) to include TF organization, responsibility of each supporting unit/agency and thorough policy matters.[122]

Returning Aliens

Discussion: Aliens continued to be returned to FTIG after I-94 Forms (Arrival and Departure Record) had been issued by INS and sponsors were notified of their departure. Some returned on their own and were placed in out-processing holding areas since State Department, VOLAG had no facility to manage these cases. The fact that an alien was resettled did not guarantee that the individual would not return due to

---

[120] TF FIG AAR, 30.

[121] TF FIG AAR, 12.

[122] TF FIG AAR, 13.

a problem, real or perceived. Some were returned by sponsors due to behavioral problems, others returned because they did not want to work for a living and some sponsors changed their mind at the very last minute.

Recommendation: The State Department/VOLAG or other responsible agency should establish a collecting point for these individuals. This place should provide the means for them to be self-sufficient until some time when other sponsors are found. Such a place could be a state-run farm/commune or other government program where they could learn to adjust to the American way of life while having an opportunity to earn money.[123]

Translation Difficulties

Discussion: The translation of California Spanish, Chicago Spanish and New York Spanish differed from Cuban Spanish. Many misinterpretations occurred.

Recommendation: As soon as possible, hire people from the country of alien origin for translating purposes. A well-educated Cuban, in this case, could have helped avoid the many mistakes we experienced.[124]

Difficulties with FEMA coordination

Discussion: FEMA was tasked to manage the Cuban Alien Support Mission in Miami, Fort Chaffee, and Fort Indiantown Gap but FEMA representatives were not available to approve actions taken by the TF and Garrison staff until five days after the execution order. Specific funding guidance and establishment of overall priorities of work was slow in developing. Lack of general data pertaining to the Cuban alien population to be received (such as percent of family units, single males, or single females) was lacking during the early planning and preparation phase of the mission. Early planning would have allowed better preparation of all proposed barracks could have been avoided had the data been available.

Recommendation: Representatives of the agency assigned overall responsibility be available as soon as the operation is implemented.[125]

On the Job Accidents

Discussion: Lack of proper instructions for temporary civilian personnel who had an accident on the job. Supervisors were not instructing temporary civilian personnel working in the alien areas what procedures to follow and to whom they were to report in the event they had an accident on the job.

---

[123] TF FIG AAR, 17.

[124] TF FIG AAR, 22.

[125] TF FIG AAR, 23, 36.

Recommendation: Proper safety and visual health program information be provided to temporary civilian personnel in case of injury.[126]

Media Control

Discussion: *Paris Match* (French magazine) continued to visit gay barracks. The intent apparently was to exploit the situation. The alien population was extremely upset as they viewed gay people as an insult to their moral fiber and that the American public perceived all aliens in the same vein. They want good publicity instead to increase the possibility of prompt sponsorship.

Recommendation: Sensitivity of alien population to press coverage should be measured prior to allowing news media to visit the population. Controversial print/audio-visual media visits should be coordinated with alien population.[127]

Pass and badge system

Discussion: A substantial number of passes/badges were unaccounted for.[128]

Recommendation: A list of infrequently used badges be compiled by name and number. The main access to each area be provided this list and use it to confirm access for all personnel.[129]

*****

Refugee Welfare

Alien Processing

Reunification of families during processing

Discussion: Above action disrupted the in-processing line since males from Area 3 had to be reprocessed between arriving planes to be reunited with their families in Area 6.

Recommendation: Do not attempt any reunification action until the last plane of aliens is in-processed and settled.[130]

Alien Status

Discussion: Due to complexity of processing operation (physical exams, INS, VOLAG interviews, etc.) aliens were confused as to their status. Aliens were anxious to

---

[126] TF FIG AAR, 25.

[127] TF FIG AAR, 14.

[128] TF FIG AAR, 20

[129] TF FIG AAR, 21.

[130] TF FIG AAR, 12.

leave FTIG as soon as they had completed their processing and had sponsors waiting. They did not understand that having all steps completed did not necessarily mean release.

Recommendation: Aliens must be kept appraised of the details regarding processing to appease them and keep them away from the Area Headquarters. This can be done through special articles in the camp newspaper and by establishing information booths manned by properly trained individuals either from FEMA, INS, or the Department of State.[131]

Social Separations

Discussion: Unilateral complaints regarding separation of population factions continued to surface. As in any large sized population social and economic differences existed. These groups resented the fact that they were thrown together into one common area.

Recommendation: Detailed interviews during in-processing, when feasible, could assist in segregating population beyond the obvious mix of family/unaccompanied males/females and juveniles.[132]

Return of aliens.

Discussion: Aliens continued to return after final out-processing by INS. Some returned on their own and others were brought back by sponsors. Aliens were placed in the out-processing or holding areas since Federal and volunteer agencies had no facilities to oversee such cases.

Recommendation: The fact that an alien was resettled did not guarantee that the individual would not return due to a problem real or perceived. Some were returned by sponsors due to behavioral problems, while others were returned because they did not want to work for a living, or some sponsors changed their minds at the last minute. The Federal or volunteer agencies should establish a location for returned aliens. This place should provide the means for them to be self-sufficient until some time when other sponsors are found, or independent voluntary relocation is feasible.[133]

Alien Accountability

Discussion: Inaccuracy of alien population count (mix) aboard aircraft departing from Florida as reported to EOC resulted in improper distribution of personnel assets at in-processing center. Mixed population arrivals also delayed in-processing, often taking three times as long, particularly in the assignment of billeting. To better organize and determine in-processing personnel requirements it was imperative to be informed as accurately as possible of the alien population mix with sufficient advance notice as to

---

[131] TF FIG AAR. 12.

[132] TF FIG AAR, 14.

[133] TF FIG AAR, 7.

allow for adjustments. Lead time requirement was 4 to 6 hours prior to ETA of aircraft at unloading site.

Recommendation: Collecting points should hold aliens and load aircraft according to population mix (planeload of families, single males, etc.) when practical, and that accurate counts be conducted as aliens deplane. Where possible, sort plane loads to isolate families/unaccompanied males/females and time departures to preclude need for an alien holding area at in-processing site.

Homesteaders

Discussion: Identification/separation of "homesteaders" during reprocessing of aliens became uncontrollable as soon as individuals found out they were being moved.

Recommendation: It was imperative that in-processing not allow so-called common law marriages into family areas. Secondly, when males were separated from females, they would find a way to get to them.[134]

*****

Refugee Health

Medical Processing

Discussion: During initial in-processing only those obvious medical emergencies were isolated for immediate treatment and/or hospitalization. Other illnesses/ injuries such as chronic asthma, diabetes, unseen/unreported lacerations (one shot gun wound detected later), burns, etc. became apparent after settling aliens in areas. No medical personnel/clinics were available in the immediate area and aliens had to be transported elsewhere. This caused a backlog of ailing aliens in the areas and much discontent.

Recommendation: Once the basic needs of the refugees (food, shelter, clothing, etc.) were fulfilled, medical problems and other ailments surfaced immediately. Clinics for sick call should be ready for operation in each area prior to arrival of first shipment of aliens. Paramedics (military or civilian) should be made available as part of the area staff to sort those cases which should be taken to sick call and others which can be treated locally. This prevents overcrowding of clinics.[135]

Medical Evacuation

Discussion: Requests for medical evacuation via helicopter (DUST-OFF/MEDEVAC) did not come through the EOC. On Sep 8, 1980, a mission was flown to transport aliens to Baltimore as arranged on Sep 6, 1980, between HHS personnel and pilots. Even though the need for DUST-OFF missions was relatively low

---

[134]TF FIG AAR, 16.

[135] TF FIG AAR, 10.

throughout the operation, the risk of losing a life (population 20,000) and embarrassment because of a faulty ground support plan existed. Support was required for alien/military emergencies. After duty hours DUST-OFF missions were hindered by the following circumstances:

- Flight time from FTIG to Baltimore and return was not less that two hours. The on-duty physician determined that the nearest cardiac support equipment was located there.
- The alternate AC was available for DUST-OFF missions while primary AC was down for maintenance. However, there was no other AC scheduled to provide a second AC (DUST-OFF) capability.
- Ground support personnel were unable to locate and provide refueling services or appropriate personnel on an emergency basis.
- Ground to air communications was not available to FTIG. Relay capability was provided by Approach Control, Harrisburg International Airport during the conduct of missions (effective but awkward).
- In all, a dozen phone calls were made by the EOC to locate personnel and equipment to support missions. All personnel contacted during this time responded with good intentions, even though some appeared apprehensive as to what they should do.
- Pilots and federal agencies should not have coordinated missions without the EOC's approval.

Recommendations:

- Develop and publish a complete DUST-OFF ground support plan to support the operation on a 24-hour basis.
- Cross train and license aircraft crews and other ground support personnel on all activities.
- All DUST-OFF/MEDEVAC requests should be processed through and approved by the EOC in accordance with stated medical evacuation procedures.[136]

Hospital RTD

Discussion: An alien was returned from Hershey Medical Center after being treated for hepatitis, but still was contagious. Contagious diseases were likely to appear in a population the size of that at FTIG. Many times, these diseases were not serious enough for hospitalization and individuals had to be quarantined within the alien population.

[136] TF FIG AAR, 30.

Recommendation: Health authorities must provide for patient care in an isolated facility until alien could be returned to the population.[137]

Personal Hygiene

Discussion: Low class aliens lived in a constant state of uncleanliness and refused to cooperate. Lack of authority of military to mete out strong disciplinary action led to an uncontrollable situation.

Recommendation: Make available segregated areas where uncontrollable/uncooperative alien personnel can be placed for more effective control and disciplinary action.

*****

Refugee Legal Issues

Agitators and Malcontents

Discussion: As in any large population, a few agitators, malcontents and anti-socials, continuously disrupted camp activities. Disruptive individuals upset the general population by creating problems. These individuals should have been permanently separated from the population until they were out-processed or demonstrated their willingness to behave.

Recommendation: A secure area should be made available for housing these individuals. This area should be surrounded by a 10' high wire mesh fence to make escape more difficult.[138]

Fraternization

Discussion: Reported fraternization between military personnel, VOLAG workers, FPS, and aliens, although sporadic, disrupted camp life. Prolonged duty at static MP posts and FPS roving patrols caused personnel to become familiar with the population due to long duty hours and reported exposure to same area of assignment. Despite the orientation and directions given to military personnel regarding fraternization with military/alien females, some incidents occurred. Verbal instructions/orientations were insufficient to guarantee that established policies would be followed implicitly. It was easy for individuals to claim that they never received the information.

Recommendation: MP/FPS personnel should be rotated periodically to limit potential for fraternization and assist in maintaining their professional status with the alien population. Sensitive policy issues should be acknowledged in writing by all

---

[137] TF FIG AAR, 16.

[138] TF FIG AAR, 21

military and civilian personnel in the TF. Signed statements should be maintained by MILPO (Military Personnel Office/Civilian Personnel Office) as evidence of understanding should a violation occur. Fraternization cannot be controlled totally but can be discouraged through prompt investigation of alleged offenses. IG team or equivalent agency under OPCON of CA/PSU should be made available to investigate internal disciplinary problems. [139]

Cuban Security Force

Discussion: When the Cuban security force was expended to make up for FPS shortfalls, some undesirables infiltrated their ranks. Aliens were likely to include their friends in any activity they participated in regardless of their background or reliability.

Recommendation: Persons occupying sensitive positions within the alien government/security force must be thoroughly screened prior to assignment.[140]

Wanton destruction of government property (troop billets)

Discussion: Due to an overall shortage of US supervisory personnel within each area of alien billets and the rapid turnover of those that were available as discussed in the next two problem areas, major damages occurred (the worst being in areas that housed unaccompanied males).

Recommendation: Staffing requirements should include personnel/billet supervisors within each area command. Such positions should be Active military or civilian so that an overall, standard policy can be maintained on living conditions within the alien population. Control and discipline should be established early and maintained throughout.

Clothing Thefts

Discussion: Aliens apparently were not satisfied with the quantity of old/new clothing issued despite several issues. They broke into clothing issue points, stole ID cards for third or fourth issues and mobbed delivery trucks. Scarcity of clothing in Cuba proved to be a motivating factor. It was reported that new clothing could only be purchased once a year with coupons issued by the government. Hoarding, therefore, became instinctive.

Recommendation: Promptly interviewing aliens to determine the economic climate of the country will result in a well-planned clothing distribution system and provide the base for an educational campaign to prevent/limit hoarding of clothing and breaking and entering to steal clothing.[141]

---

[139] TF FIG AAR, 11-12.

[140] TF FIG AAR, 16-17.

[141] TF FIG AAR, 15.

Document Forgery

Discussion: To gain legal access to other areas, aliens forged notes from clinics and Area Commanders and manufactured semi-official passes. MPs at area entry points in many cases did not challenge validity of documents. Aliens at FTIG were ingenious and would find any means to falsify notes/passes to move freely between areas. The availability of laminating machinery at alien administrative operations facilitated fabrication of official looking passes.[142]

Recommendation: MP operations should repeatedly brief guards on camp policies to preclude lapses of memory and ascertain those replacements are well indoctrinated on rules, any equipment which can be utilized to falsify passes should be kept at the Area Headquarters level and secured every evening. Should security be a problem, this equipment should be stored by the CA/PSU S4.[143]

Clothing Hoarding

Discussion: Clothing issue points continued to be of interest to the aliens. Although adequately clothed, the hoarding instinct continued to be strong, and break-ins were attempted frequently.

Recommendation: Where possible, clothing issue points or warehouses, whether containing new or old clothing, should not be located within alien areas. Distribute/store new clothing elsewhere outside of alien compounds.[144]

Trespassing

Discussion: Alien troublemakers showed their discontent by climbing onto roofs and chimneys. Without prior planning it was impossible to physically prevent aliens from gaining access to other parts of the exterior of buildings.

Recommendation: Carefully evaluate potential sites for individual/group demonstrations. Above problem was resolved by placing concertina wire on second floor overhang of all barracks and around chimneys and poles.[145]

Resistance

Discussion: Resistance was encountered while erecting barricades between Areas 3 and 4. Objections were voiced by the very same aliens who originally requested these areas be separated. The mood of the community changed rapidly, and the alien government was not always able to convey that mood in a timely manner.

---

[142] TF FIG AAR, 13.

[143] TF FIG AAR, 12.

[144] TF FIG AAR, 15.

[145] TF FIG AAR, 16.

Recommendation: Before acting on a request of any magnitude it must be thoroughly examined and coordinated with those affected. Once a determination is made, a concerted effort must be made to "sell" the idea to the aliens prior to acting.[146]

Acts of violence

Discussion: Criminal elements banded together taking advantage of every opportunity to terrorize the remainder of the population. The frequency of their activities appeared proportional to the amount of security, credibility of the security force with the general population and the fairness of security activities.

Recommendation: The security effort must be such that it can adjust in size and effort as required by the Discussion. As military and Federal police resources are limited, an increase of alien security personnel is easier accomplished. The aliens chosen for this mission should be screened for reliability and ability. They should be trained, equipped, and given necessary authority for limited police actions. They should be guaranteed sponsorship but remain in position until closure of the camp. The alternative to this would be to have sufficient military or Federal police resources.[147]

Isolated attacks of Cubans versus Cubans

Discussion: MPs monitored enclave activities and report suspicious activities to proper authorities. Also, they had to monitor formations and actions of alien gangs.

Recommendation: Position guard shacks for maximum visibility and number the posts for continuity. Each agency should receive strip maps locating each post for response purposes. Intelligence channels should gather all possible information on gang activities and pass it to security and control personnel with a list of possible alien courses of action.

Flagrant display of weapons inside alien areas

Discussion: Weapons were being manufactured from items such as doorknobs, bunk adapters, broom sticks, etc.

Recommendation: Security forces coordinate and perform organized, systematic searches for materials as well as homemade weapons.[148]

Runners/strollers/walkers.

Discussion: Males continually attempted to enter female areas. Barriers around selected areas of the perimeter were effective in reducing running incidents.

Recommendation: Enforce policy to place offenders into detention for repeated offenses. Install a wire barrier to surround an entire perimeter and divide the areas to allow better control of the alien population.[149]

---

[146] TF FIG AAR, 17.

[147] TF FIG AAR, 18.

[148] TF FIG AAR, 19.

[149] TF FIG AAR, 21.

Counterfeit passes/badges

Discussion: Numerous counterfeit passes were observed being worn by aliens inside areas.

Recommendation: All agencies should increase pass/badge checks. All badges must be scrutinized due to aliens processing badges similar in appearance to valid badges.[150]

Unaccounted for aliens

Discussion: As a result of changing the security program, an alien leaving an area checked out by leaving his meal card with an MP on one of the static guard posts. When the alien returned, he would get his meal card back from the post. All meal cards did not claim each day were returned to the appropriate area headquarters.

Recommendation: That this system be expanded, and a more aggressive follow-up be taken for aliens not returning to their designated areas.[151]

Unauthorized escorts

Discussion: Aliens were discovered off post or in unauthorized areas, escorted by civilians who did not have the authority to take them away from their assigned areas.

Recommendation: Personnel involved in unauthorized escorting should be subjected to disciplinary action or termination of employment.[152]

Safety of Engineers

Discussion: Post Engineers refused to enter barracks areas to make repairs, particularly during the hours of darkness. They were fearful for their safety, and some claimed their tools were stolen while working. Cuban aliens were particularly active in the production of home-made knives. Screw drivers and other tools which could be reshaped made excellent weapons and they would seek every opportunity to steal these items.

Recommendation: All repairs, not of an emergency nature, should be made during daylight hours and a trusted person should escort the repairman. When repairs are required during the evening hours a military escort, where feasible, should be provided.[153]

*****

Military Personnel

---

[150] TF FIG AAR, 21.

[151] TF FIG AAR, 21.

[152] TF FIG AAR, 21

[153] TF FIG AAR, 15.

Personnel Turnover

Discussion: Reservists augmenting CA/PSU on MUTA 4 and 5 add to the turbulence of the two-week turnover of personnel on AT. Although MUTA 4/5 participation in the refugee operation was good training for reservists, their short stay precluded effective utilization and further increased the administrative workload of the operation.

Recommendation: Do not allow reservists to conduct MUTA 4s training during any future refugee operation.

Personnel Accountability

Discussion: No accurate account of TF personnel until the TF MILPO was established. Upon arrival of TF units and individual members TDY, there was no established method to accurately account for personnel until establishment of the TF MILPO.

Recommendation: Procedures be established in advance to facilitate immediate accountability of personnel.[154]

Lack of proper notification to augmentee personnel

Discussion: Most personnel were told of TDY from 24 to 48 hours in advance with little or no knowledge of functions or positions to be held. Orders were also not specific as to what requirement each service member was being assigned.

Recommendation: For future operations, a simple numbering system be used when requisitioning. This number along with duty position/MOS should be indicated on TDY orders. As a minimum, orders should relate to which staff section a service member is assigned. [155]

Manning Requirements

Discussion: Original manning requirements for TF operations were done by recommendations from USAG personnel (handwritten). Personnel reporting for duty had to be matched against a position IAW grade/SSI/MOS and it was extremely difficult to ensure the best use of TDY personnel.

Recommendation: Develop staffing guide for a TF type operation which would allow for authorizations based on personnel and/or population and area (disaster relief, relocation operations, etc.). Staffing guide should address both a TF and Joint TF.[156]

Continuity of units/personnel

---

[154] TF FIG AAR, 24.

[155] TF FIG AAR, 24.

[156] TF FIG AAR, 27.

Discussion: There was very little continuity of personnel/units assigned to support this operation. US Army Reserve units/personnel were assigned on a two-week, rotating basis which made it difficult to determine requirements or safeguard government property as personnel/units signing for property kept changing. In addition, knowledge of the logistics operation was lost, and the new personnel had to be acquainted with our procedures. This problem and the fact that as each unit rotated it took with it a good portion of the expendable supplies that were purchased to support this entire operation not only caused additional work on the Directorate of Industrial Operations (DIO), but also additional cost to the overall operation.

Recommendation: That units/personnel be assigned for the duration of the program or not less than 30-60 days.[157]

Civil Affairs/Provisional Support Unit Augmentation Personnel (Active)

Discussion: Active Army personnel available for periods less than 30 days were not productive especially if they had to be in a "key personnel" position. CA/PSU key personnel, to include both area staffs (down to billet supervisors) and headquarters staff, gained knowledge of the operation and then, in many cases, departed.

Recommendation: Key personnel staff positions should be assigned to Active-duty personnel who can remain for the duration of the operation or a major portion thereof (at least 60 days). [158]

Civil Affairs/Provisional Support Unit Augmentation Personnel (Reserve)

Discussion: Reservists on MUTAs, although gaining "hands on" knowledge of operations, did not have sufficient time to perform productively in camp management, similar to active-duty personnel on orders for less than 30 days. Reservists on MUTA's only added to the turbulence of the two-week turnover of personnel on AT.

Recommendation: Reservists on MUTAs should not be allowed to participate in future operations of this nature.

*****

Sustainment

Lack of logistical/operational decisions by Federal agencies

Discussion: During the planning stages many questions surfaced having direct impact on plans for out-processing: Without answers several courses of action were needlessly developed to be prepared for any contingency. Answers needed to prepare definitive plans included, but were not limited to, type(s) of aircraft (for seating

---

[157] TF FIG AAR, 33.

[158] TF FIG AAR, 6.

capacity); definite departure data; how much weight of personal items per person would be allowed and shipping instructions for other possessions (record players, stereos, etc.).

Recommendation: Federal agencies should establish and publish policies on movement matters as early as possible to facilitate necessary planning.

Prioritization of support units/temporary hire personnel.

Discussion: It became apparent early in the operation that certain support units should be among the first units to arrive rather than the last. With the early arrival of CA units and Federal agencies placing heavy demands on logistics support, staffing was not adequate to satisfy the increased demands. Similarly, priority was given to the hiring of interpreters rather than warehouse personnel.

Recommendation: A priority listing must be written having a proper mix of units/personnel to oversee all identified functions.

Menu

Discussion: At the start of the operation, the aliens were fed the Standard Army 14 Day Reserve Menu which this installation had pre-stocked in preparation for AT 80. It became apparent that this menu was not entirely satisfactory as it did not conform to the Cuban's culture, dietary desires, or restrictions. Additional sugar had to be added and other items had to be deleted or prepared differently to meet the requirements of the Cubans.

Recommendation: That prior planning for an alien/refugee menu should take into consideration an evaluation of the alien's culture, dietary desires, and restrictions.[159]

Meal Cards

Discussion: Issuing monthly meal cards without alien identification number or mess hall to be utilized created an uncontrollable situation in that aliens were returning for second and third feedings for the same meals. Symbol and color coding of meal cards with assigned mess halls was, likewise, problematic since alien and mess hall personnel ignored the system. Positive control of meal cards was imperative to limit multiple feeding and utilization of more than one mess hall.

Recommendation: Meal cards should be laminated and affixed to neck chain along with alien ID tag. Mess card should bear alien number, the mess hall number to which they are assigned and an individual sequence number which is checked off prior to entering mess hall. This prevents double feedings and utilization of another mess facility. [160]

---

[159] TF FIG AAR, 33.

[160] TF FIG AAR, 9.

Feeding Times

Discussion: To feed a regular meal to 500 civilians, particularly in the family area, took longer than two hours. This was especially true when families ate together. Many mess halls remained open beyond the 2-hour schedule feeding time to accommodate aliens still waiting in line to eat. Some mess halls closed promptly and left aliens without food.

Recommendation: Before establishing meal hours a concerted effort must be made to determine the number which can be fed per meal and the proper length of time mess halls must remain open to accommodate that quantity. For example, Orientals dietary needs (rice, fish, etc.) lend themselves to fast processing through mess lines. Cubans, on the other hand, being fed regular GI rations could not be expected to eat as quickly/neatly as disciplined troops. Meal hours were subsequently extended by 30 minutes.

Dietary Problems

Discussion: Many complaints of stomach-aches, vomiting, diarrhea, particularly with infants and young adolescents. Feeding aliens three full meals a day contributed to ailments. Aliens were not accustomed to so much food, particularly meat three times a day, and they tended to overeat/return for a second meal since they did not know we were going to continue feeding them regularly. American baby diets were not tolerated by alien babies since they were weaned on milk with sugar and mashed potatoes.

Recommendation: It cannot be assumed that aliens can tolerate American dietary habits. When refugees arrive from an area where food shortages are common, rations should be adjusted accordingly to bring the aliens slowly to a level of normal dietary intake. Particular attention must be given to baby diets. Local feeding customs should be followed despite nutritional content until such time as babies/young adolescents can assimilate normal diet.

Removal of food from mess halls by aliens.

Discussion: Aliens were fearful that they might not be fed again, and/or removed food for other individuals who were too lazy to stand in mess hall lines. Aliens doubled their evening meal intake by attempting to remove food out of mess halls. Altercations were frequent. Many aliens did not eat breakfast. Consequently, they tried to fill up at evening meals since their next meal would not be until lunch the next day.

Recommendation: Two military personnel should be placed on duty at each mess hall during eating hours, one at the entrance way and the other at the other exit point. Posting these individuals should begin from the very start of the operation and continue until such time as aliens would not remove food from mess halls. Encourage aliens to eat breakfast.[161]

---

[161] TF FIG AAR, 17.

Lodging

Discussion: Once settled, aliens began to move bunks from one building to another to be with friends. Stability of population cannot be guaranteed merely by assignment of billets and explaining rationale for it (ability to locate for processing).

Recommendation: In future operations aliens should be advised to remain in assigned building until convenience moves can be arranged.

Religious Services.

Discussion: Due to several individuals scheduling services, they were scheduled for the same time and same place.

Recommendation: All services must be coordinated through one person to avoid conflicts.[162]

Postal Services

Discussion: Postal services for the support units and Cuban aliens were provided by Army Reserve postal units and American Red Cross respectively. The USPS refused to provide any on site postal services. While ARC did a satisfactory job in processing and delivering alien mail, there was very little control or security measures established for processing and securing accountable mail.

Recommendation: That on site postal service be provided for support troops and the alien population by USPS.[163]

*****

Facilities Management

Installation/Task Force Integration

Discussion: BG Grail L. Brookshire, Assistant Division Commander of the 4th Infantry Division, was assigned as Task Force Commander, and the Installation staff became the Task Force staff. Using the installation staff as the TF primary staff provided the TF Commander with the capability to immediately assess the local Discussion, effect necessary policy and operational changes in a timely manner and eliminate the requirement to bring in a principal TF staff.

Recommendation: That TF organizations in similar operations in the future integrate TF and installation staffs at the onset. [164]

---

[162] TF FIG AAR, 26.

[163] TF FIG AAR, 27-28.

[164] TF FIG AAR, 5.

Care of areas/buildings.

Discussion: As areas used for billeting of aliens were returned to the installation, it became very apparent that a major clean up and renovation would be required to put these areas back into a state of occupancy for military personnel. Disregarding the damage that was done during the disturbances, the general condition of the buildings was deplorable. Windows were broken, latrines were damaged, and the walls and floors were filthy. It was apparent that very little was done to ensure that buildings were kept clean and sanitary. If some sort of inspections were held of the barracks to stress sanitation and respect of property, it may have precluded a lot of damage.

Recommendation: Those daily inspections be conducted to ensure that buildings are maintained in a suitable condition.[165]

Water Supply

Discussion: Water pressure presented problems at FTIG due to hot weather (100° + for three continuous days). This was compounded by aliens using garden hoses to cool down and suppress dust around billets. Heat affects everyone and water utilization was difficult to control during a hot spell.

Recommendation: Water coolers should be made available to aliens and floor fans installed in billets. This would minimize excessive consumption of water.

Water Pressure

Discussion: Due to a combination of conditions, the pressure on the installation water distribution system increased significantly during early morning hours, causing numerous water main breaks. Coordination with the Jonestown water pumping station which supplies water to the installation an adjustment of water level controls within the water storage tanks on post was required to properly regulate the water pressure.

Recommendation: The water distribution system be monitored daily, and adjustments made, if required, to ensure that the problem does not occur.

Engineer Requests

Discussion: During the first week of the mission, [Department of Facilities and Engineering] DFAE supervisors and employees were inundated with verbal requests from Task Force, Garrison, and alien support activities. Under normal conditions, work order request forms were submitted by the requestor. Due to the time frame established and urgency of work, work request forms were prepared by this office (instead of the requesting activity) which created a massive backlog of work order and paperwork. After the EOC was activated, most of the work requests were forwarded to the engineering representative at the EOC. However, many activities continued to request work verbally by calling DFAE supervisors and employees. When time was of

[165] TF FIG AAR, 34.

the essence, officials simply ignored normal time-consuming procedures, such as filling out forms or preparing [Disposition Form] DFs.

Recommendation: The assignment of an engineering representative to the EOC did assist DFAE in obtaining written work requests from requestors.[166]

Work Requests

Discussion: Individuals forwarding requests for work did not provide sufficient data or details and significant time was expended by DFAE personnel in obtaining data from the requester. The above problem persisted, even during normal operations. Requestors were continually reminded to provide adequate information.

Recommendation: Established written guidance be provided all agencies.[167]

*****

Mission Termination

Departure of Military Personnel

Discussion: Departure of CA/PSU S4 and [Property Book NCO] PBNCO to home station prior to the end of operation caused turmoil/discord and no final solution to property accountability problems. Property accountability during refugee operations, particularly that which was used by the refugees, was an almost impossible task due to inability to hold them pecuniarily responsible. Furthermore, control/inventory of real property and other accountable items such as bunks/wall lockers was hampered by the aliens' disregard for our government property.

Recommendation: The understanding be made clear from the beginning for key personnel that they will be placed on TDY for the duration.

---

[166] TF FIG AAR, 36.

[167] TF FIG AAR, 36.

Annex D. Timelines

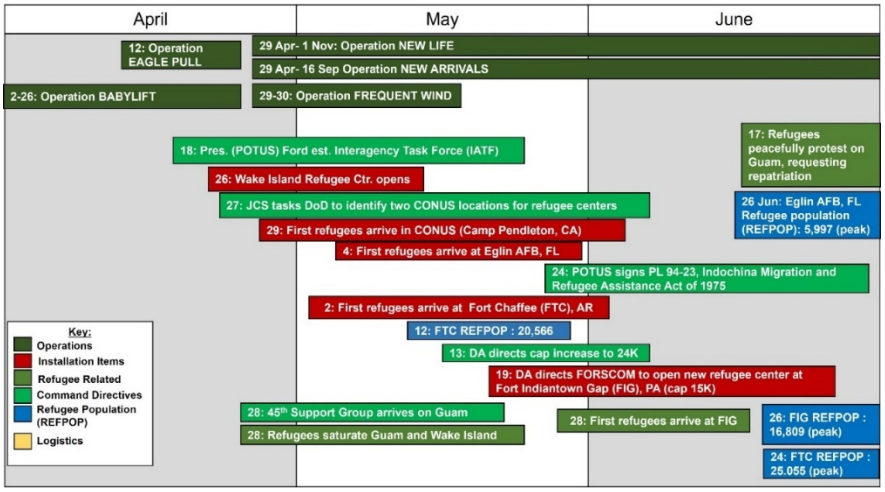

Figure 15- Operation NEW ARRIVALS, APR-JUN 1975[168]

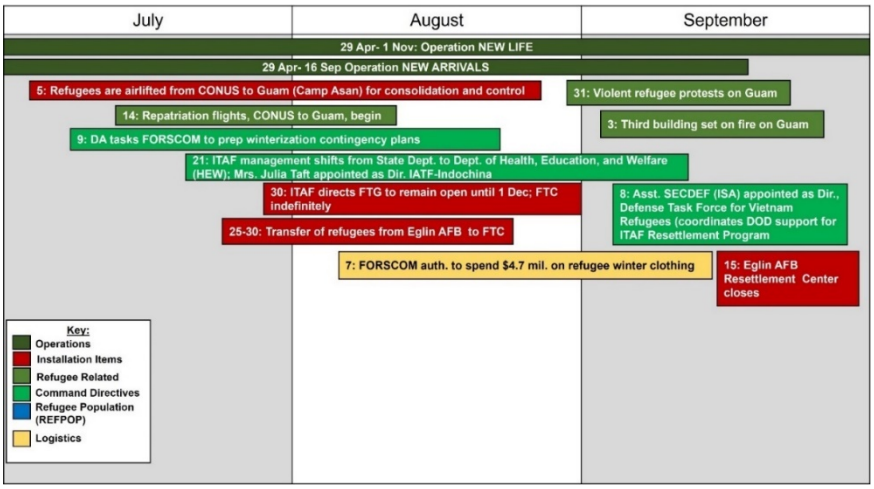

Figure 16- Operation New Arrival, JUL-AUG 1975[169]

---

[168] ODCSOPS AAR, 1-A-8 through 1-A-10

[169] ODCSOPS AAR, 1-A-10 through 1-A-1

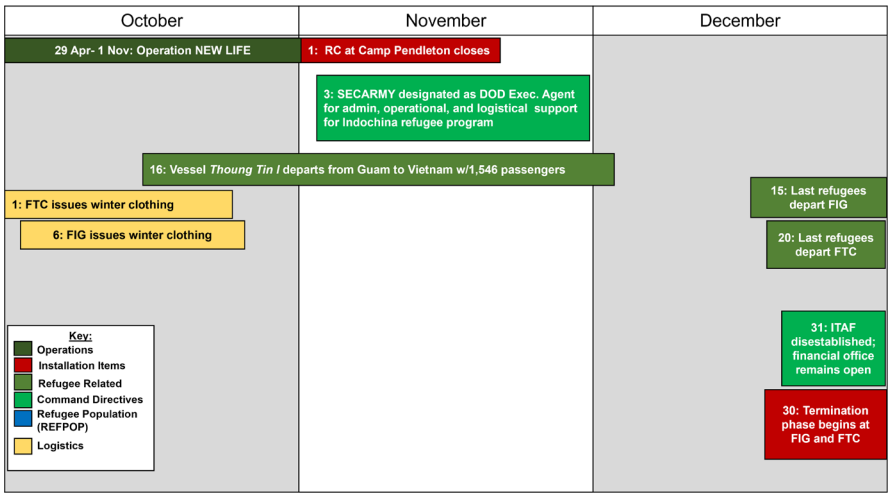

Figure 17- Operation New Arrival, OCT-DEC 1975[170]

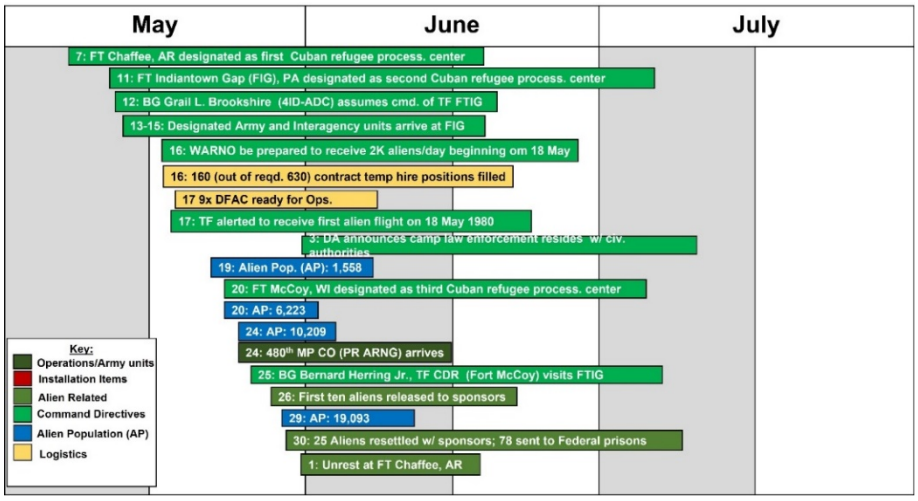

Figure 18-Fort Indiantown Gap, May- July 1980

[170] ODCSOPS AAR, 1-A-10 through 1-A-1

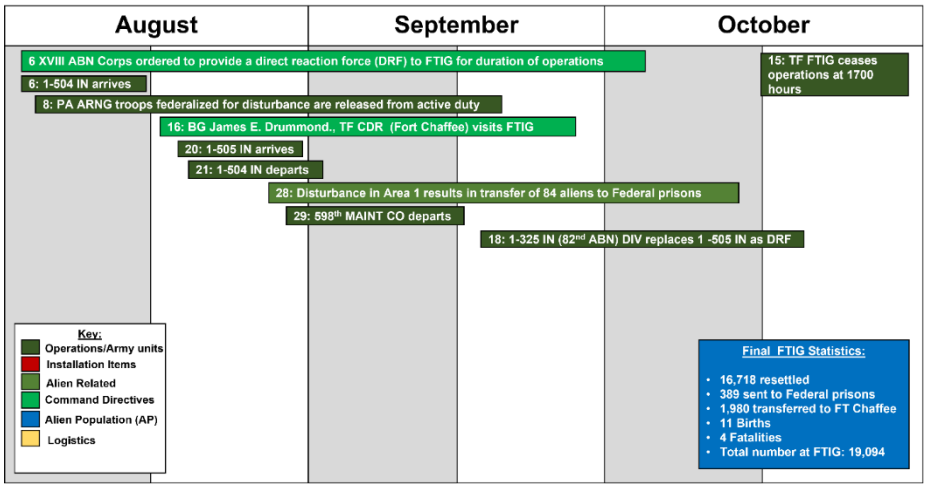

Figure 19-Fort Indiantown Gap, AUG-OCT 1980